Deuterium-Tritium Fuel Cycle Considerations for Plasma Physics

Ian Bonnett MIChemE MSaRS CEng
Tritium Plant Section Leader
ITER Organisation

Disclaimer: The views and opinions expressed herein do not necessarily reflect those of the ITER Organization

Contents

Section 1
Current Experience

Section 2
Fuel Cycle/Physics Relationship

Section 3
Summary

CURRENT EXPERIENCE

Basis for Fuel Cycle technologies

Characteristics of magnetic fusion

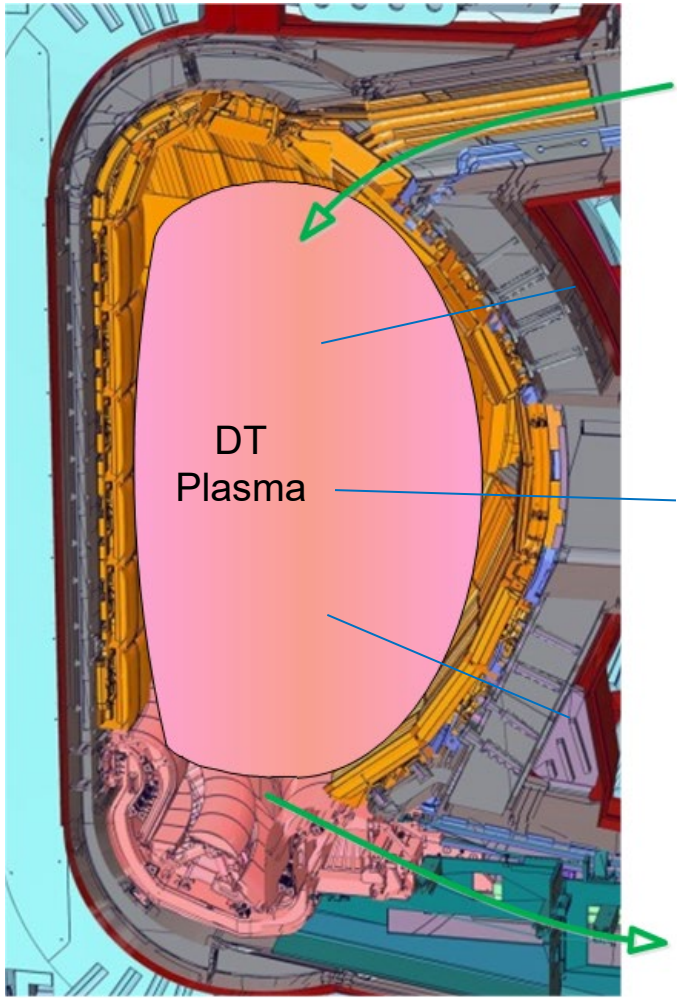

Magnetic plasma resists injection of replacement fuel

He “ash” and impurity build-up quenches fusion reaction

Tritium is radioactive and expensive

Only a fraction (~1%) of the fuel burns per pass

Vacuum must be maintained around plasma

Technology needs

Fueling

Tritium Processing

Drives all *Fuel Cycle* technology

Vacuum

ITER Fuel Cycle – Simplest View

Fuel Cycle consists of vacuum, tritium processing and fueling technologies

1. Deuterium-Tritium is circulated through the reactor
2. Deuterium is circulated through heating beams
3. Tritium is recovered from water and gases

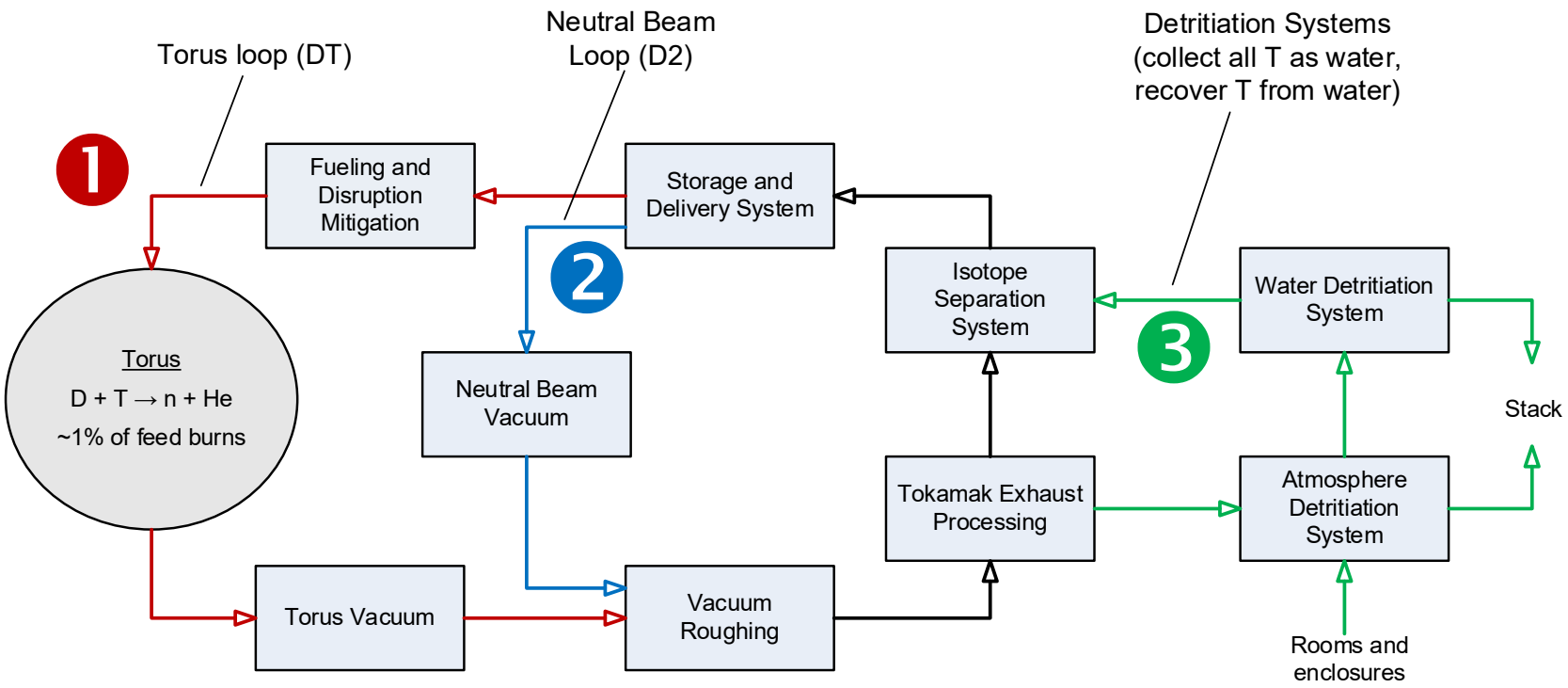

ITER Fuel Cycle – More Detail

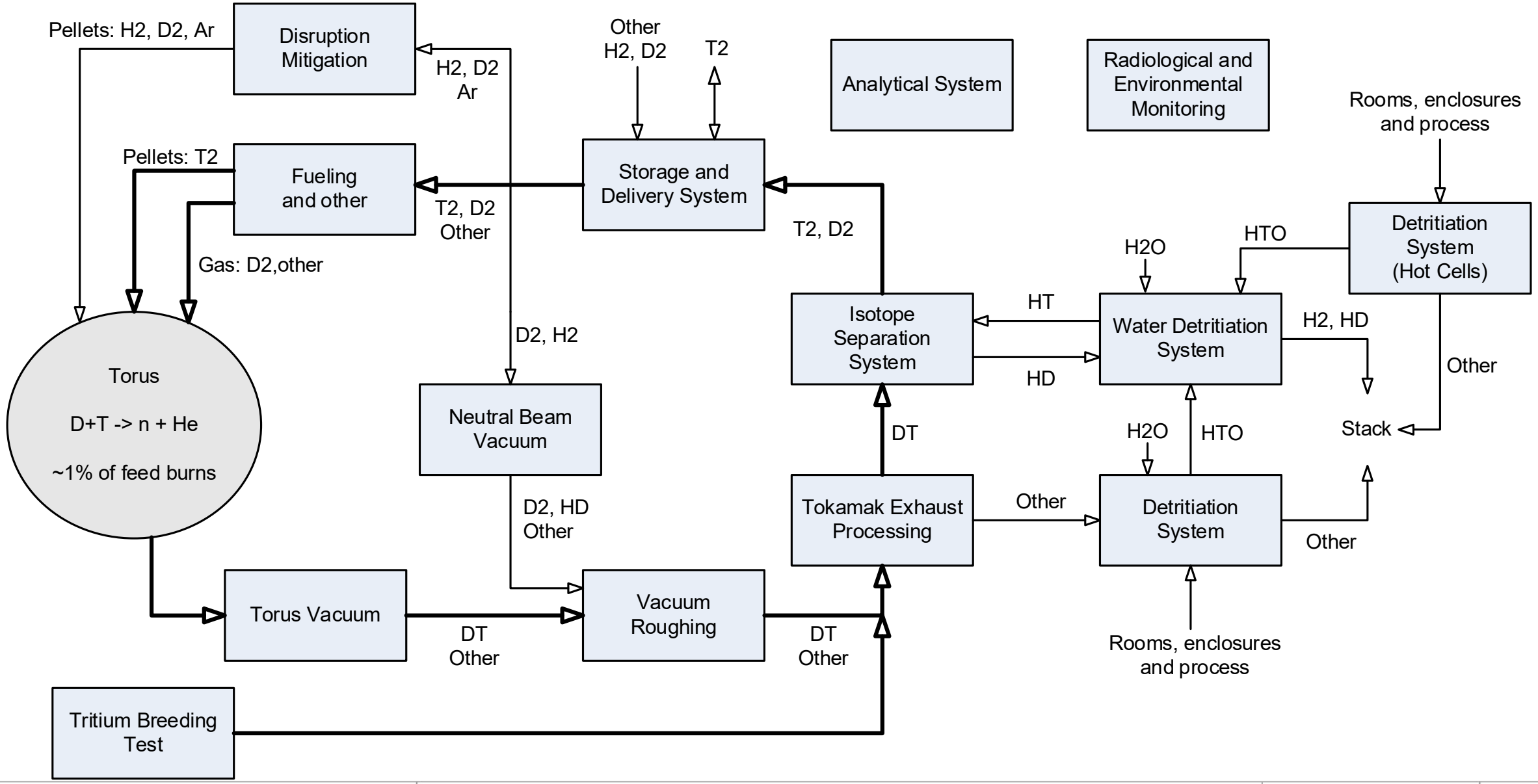

Multiple, Simultaneous and Varying Missions

- Simultaneous missions
  - Reactor fueling – low purity D2 and T2
  - Neutral beam neutralizer – medium purity D2
  - Neutral beam ion source – high purity D2
  - Water detritiation – very high purity H2
- Varying conditions
  - Due to plasma on/off
  - Cryopump regeneration

Flow & composition from vacuum pumps

He with trace DT (CVC)

DT with Ne

Argon/N2 with trace DT & impurities e.g. CQ4

HTO with trace DT & impurities e.g. NQ3, QI

Tritium Plant & Fueling

Flow & composition to clients

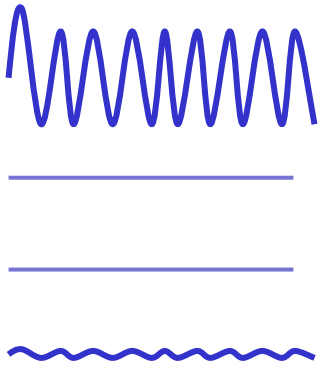

Pellet injection/gas puffing	>85% T, <15% D pellet >85% D, <15% T pellet >85% D, <15% T gas
Neutral Beam neutralizer	<1% T, >99% D gas
Neutral Beam Ion Source	<200ppm T in D gas <200ppm T in H gas
Effluent H2 to Water Detritiation	H2 with <5ppm T gas

Effluent (Ar, Ne, CO2, etc) < 10e-6 T Bq/m3 to Stack

Tritium Inventory

- Its inventory is limited to the bare minimum because tritium is:
  - Hazardous
  - Limited resource
  - Expensive
  - Proliferation concern
- **Lower inventory means:**
  - Faster processing times required
  - Great linking of control loops
  - Compounded reliability issues
  - Increasingly unstable control as the damping effect of “capacitance” is reduced

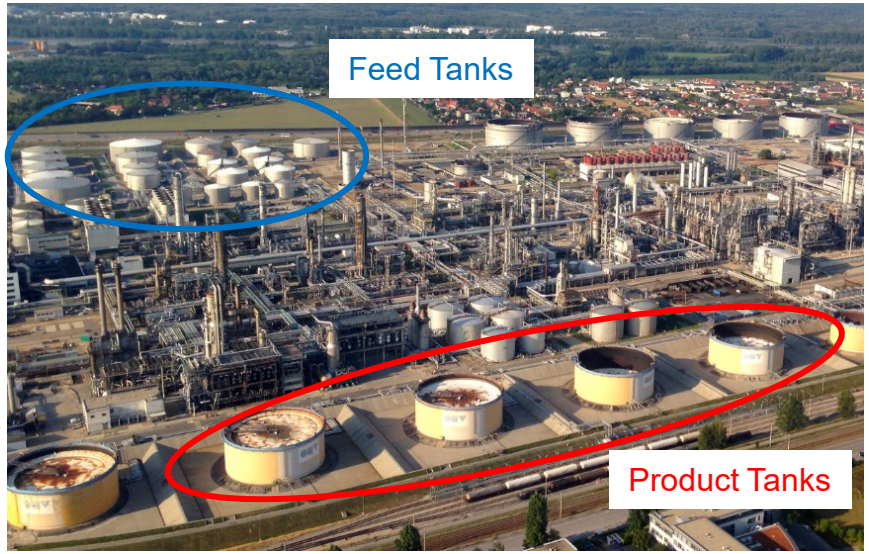

OMV Oil refinery Schwechat

https://commons.wikimedia.org/wiki/File:Vienna_aerial_OMV_refinery_2aug14_-_4_(15105024542).jpg

Torus and Fuel Cycle Segregated by Buffer Tanks

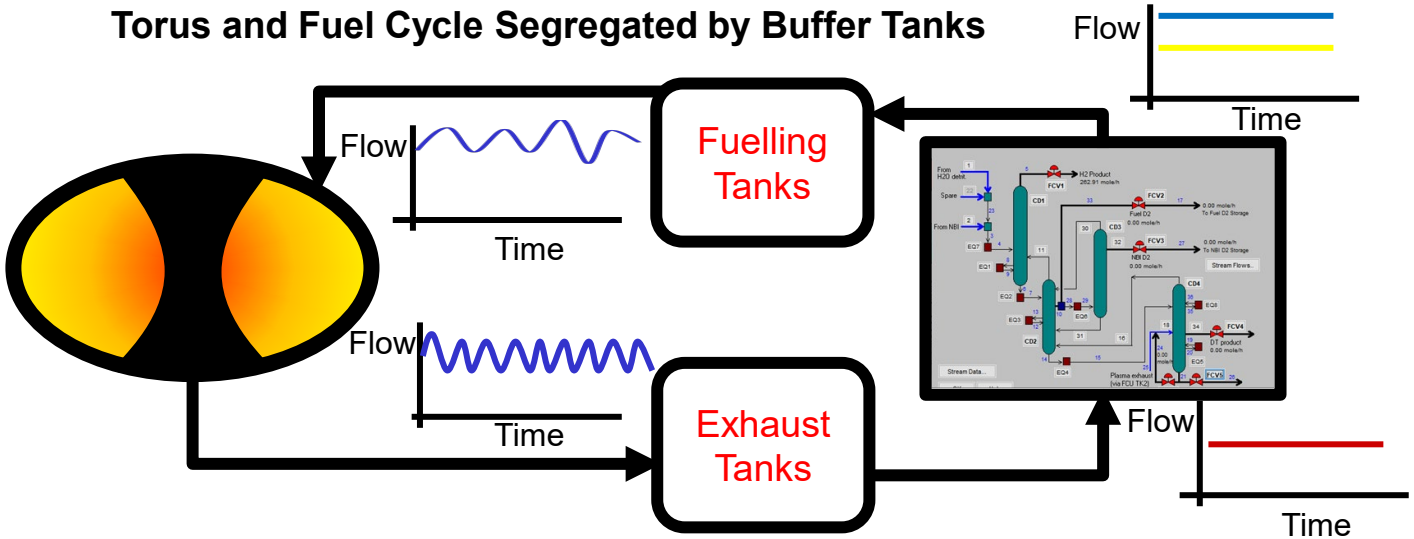

Torus and Fuel Cycle Connected without Buffer Tanks

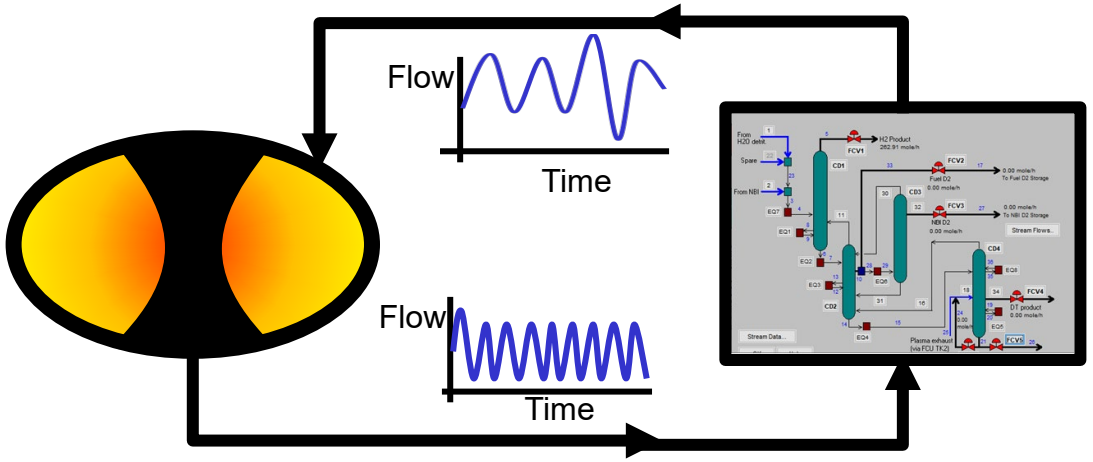

FUEL CYCLE / PHYSICS RELATIONSHIP

Burn Fraction (fraction of T burnt verse T fuelled)

- The burn fraction of any fusion concept will drive fuel cycle design
- Lower burn fractions lead to greater flow leads to larger equipment, more T2 inventory….safety and supply concerns

Physics requirements on fuel throughput in ITER,
A.S. Kukushkin et al. J. of Nuclear Materials 415 (2011)

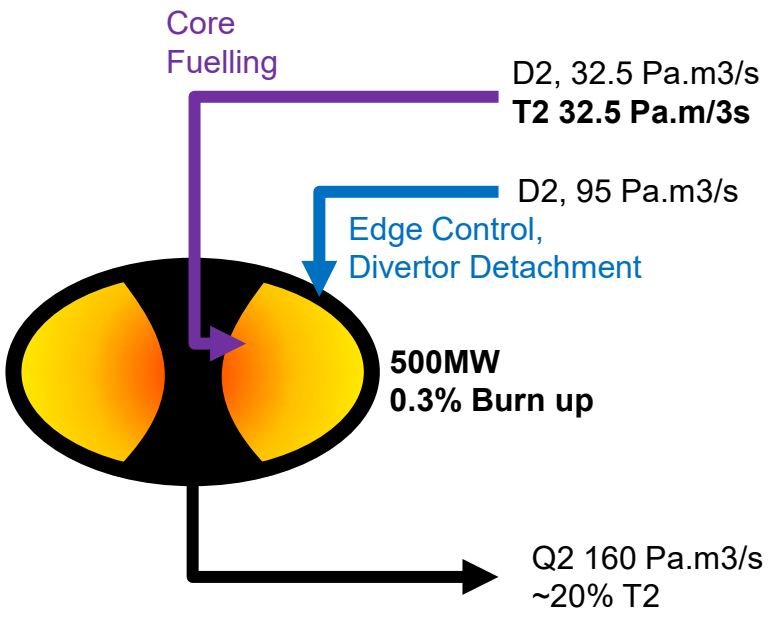

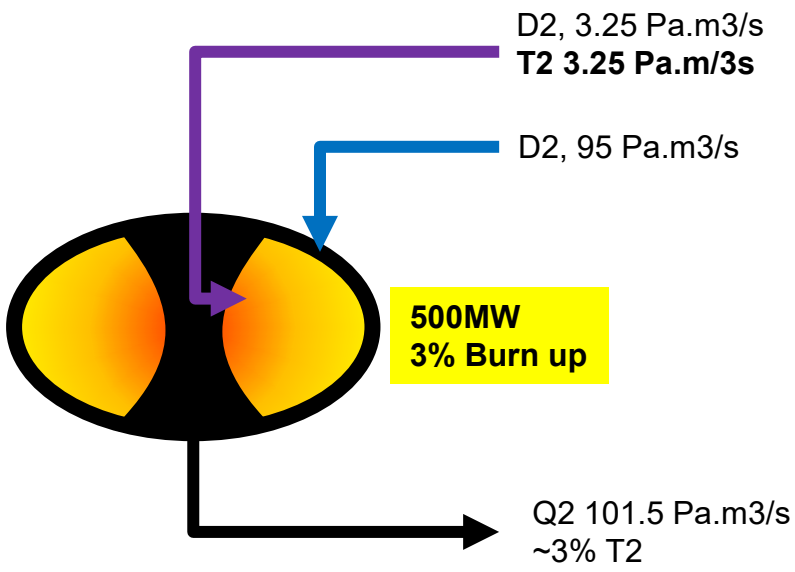

Scales

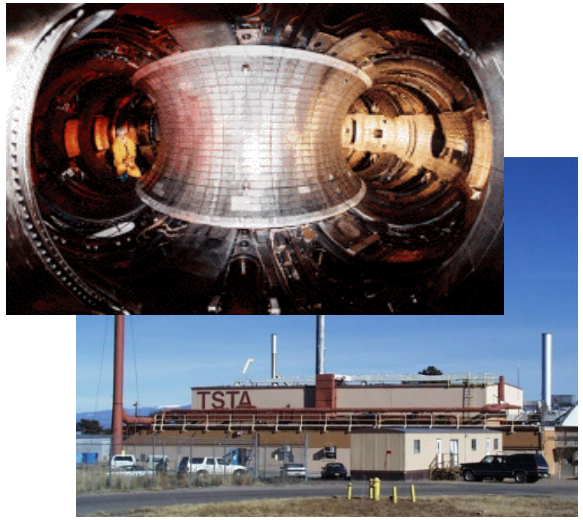

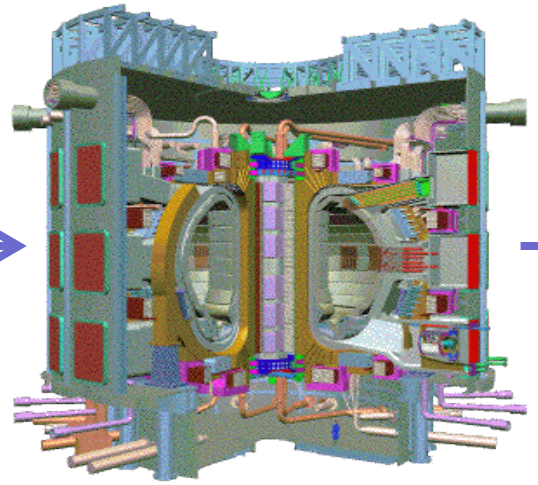

State-of-the-art
Fusion power: 10's MW
Burn fraction: Nil

Pulse length: seconds

T_2 Fueling rate: 0.1 kg/h (TSTA)

ITER
Fusion power: 500 MW
Burn fraction: 0.3%

Pulse length: 3000s

T_2 Fueling rate: 1.1 kg/h

DEMO
Fusion power: 2000 MW
Burn fraction: 1.15-3%?

Pulse length: Continuous

T_2 Fueling rate: ~0.6 to 1.5 kg/h

ITER Fuel Cycle similar for DEMO scale

Fuelling with T2 pellets and D2 gas

- Direct recycling means recycling mixed DT back to fuelling – with minor isotope balancing
- Referring to "*Plasma chamber particle balance and physics of fuel behaviour*" presentation by A. Loarte and "*Isotopic Fuel Tailoring as Actuator for Burn Control in Tokamak Reactors*" by E. Schuster
- Enriched T2 pellets for the centre of the plasma and D2 gas puffed into the VV means that isotope separation of the exhaust gas is required

If fixed DT Core Fuelling is Allowed

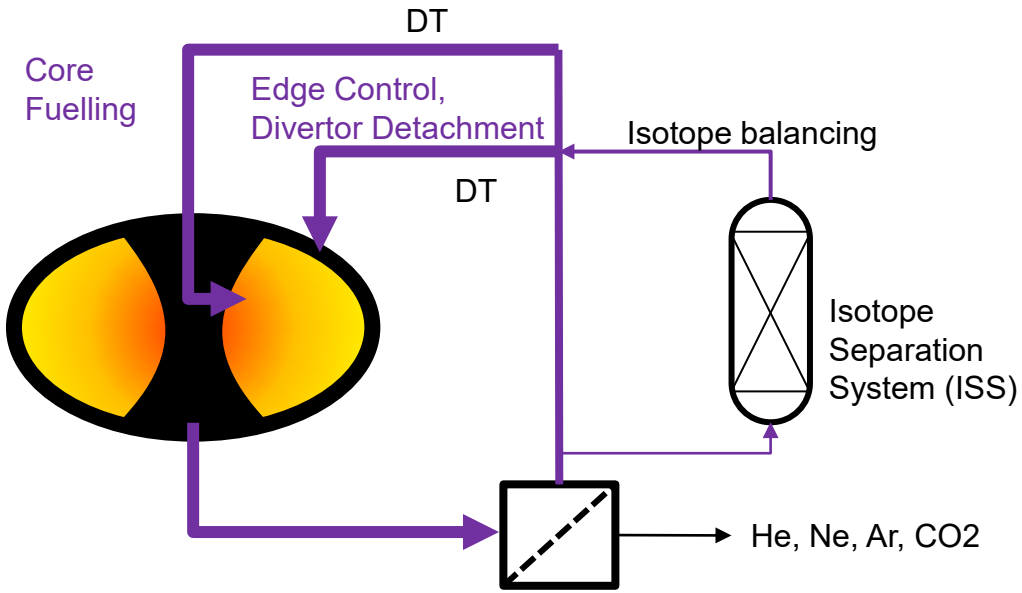

If T2/variable Core Fuelling is Required

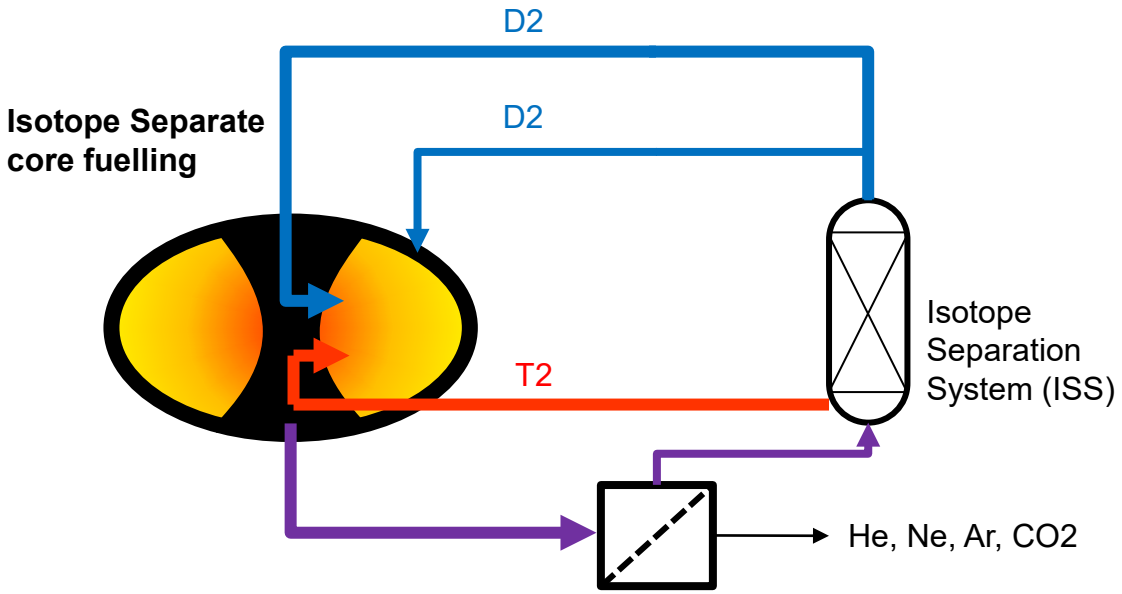

Purity of Fuelling Material

- Some separations are easy and some are hard
  - 50% or 60% is easy,
  - Whereas 200ppm T2 in D2 is really hard
- **High purity requirements drive the design**
  - Increases the size of the Isotope Separation System
  - More separation stages
  - More reflux (material moving up and down the column)
  - More inventory
  - More expensive equipment

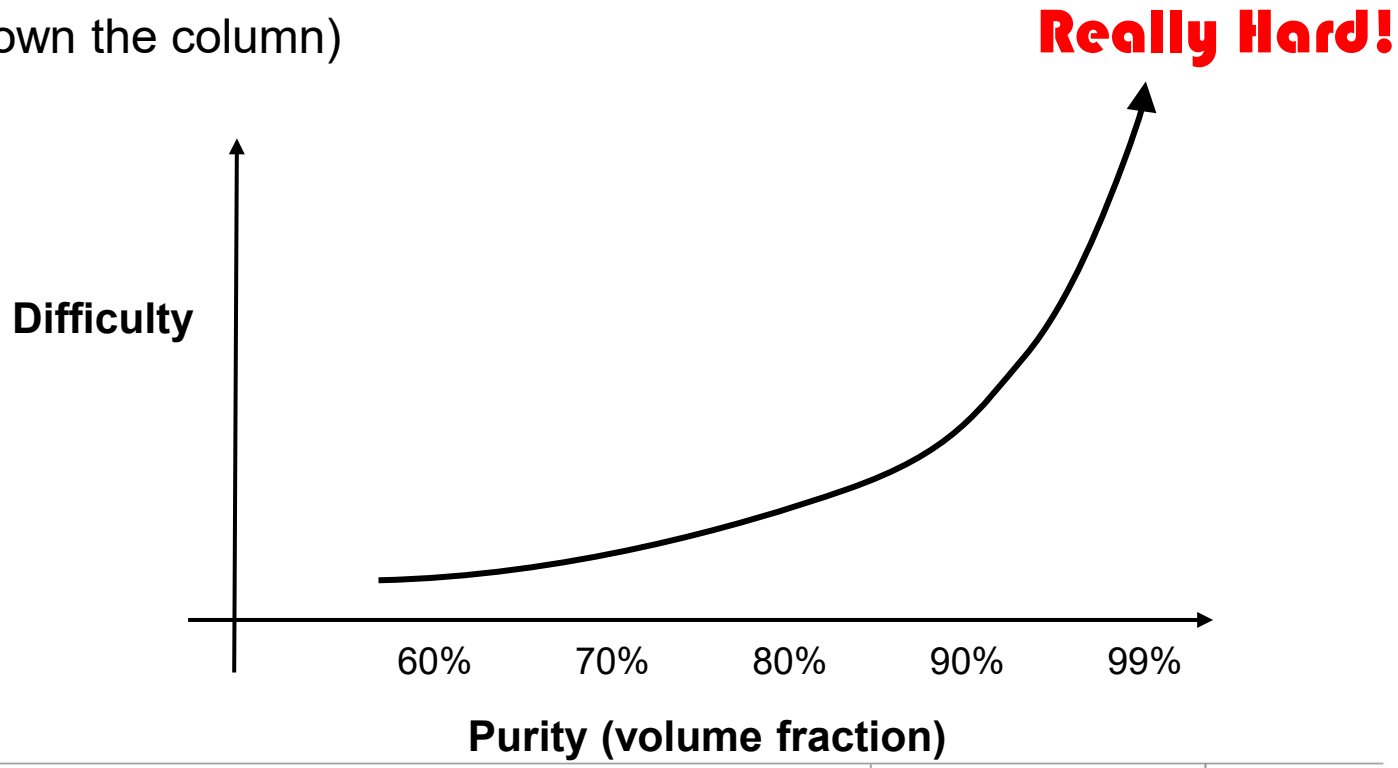

Plasma Control

- Changing compositions and flow to the Fuel Cycle or from the Fuel Cycle increases complexity
- Example changing from plasma exhaust (DT) to NB Regen (D2 or H2)
  - Creates a step change in composition in the feed to the columns – impacts isotopic profiles and products
- Without Neutral Beams, things will get simpler….

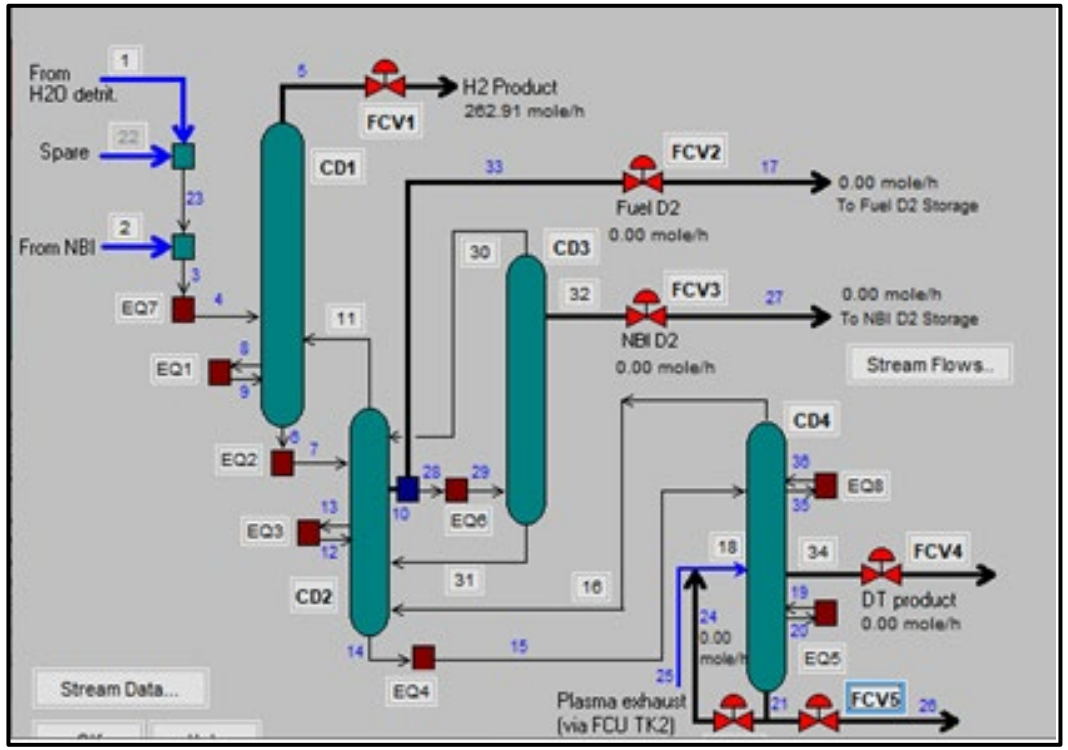

Example cryogenic distillation cascade for hydrogen isotope separation Courtesy of NITEK USA

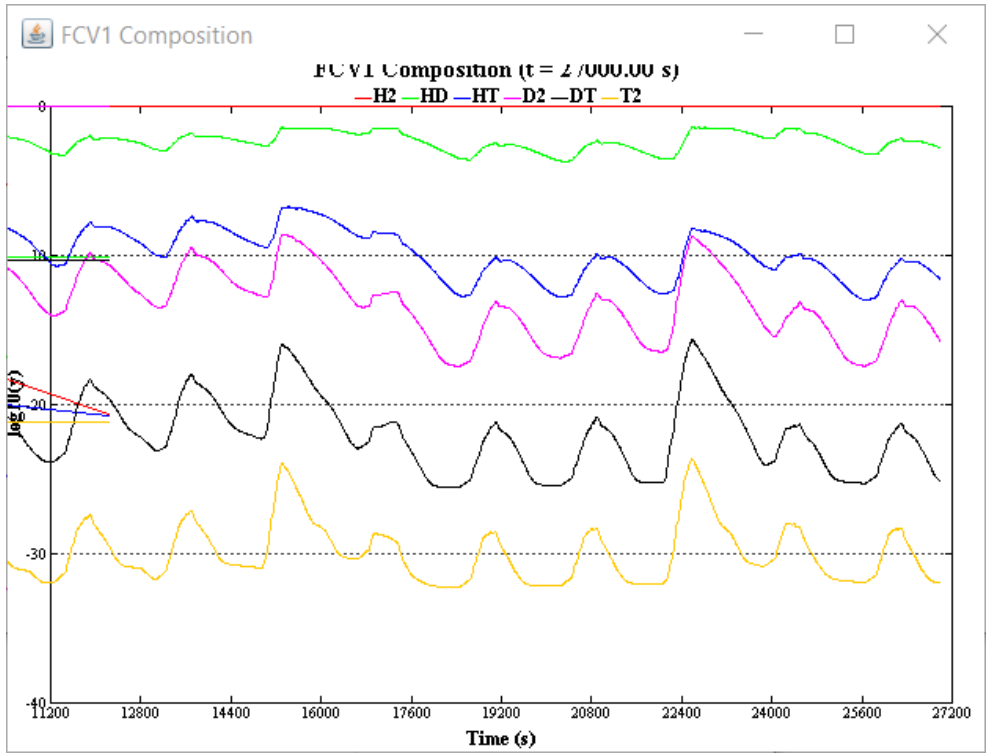

Isotopic profiles Courtesy of NITEK USA

Is this the Tritium Plant or the Deuterium Plant?

Isotope	Storage Capacity for Fuelling (relative)	Storage Capacity for Neutral Beams (relative)
T2	8X	0
D2	12X	**40X**

- Heating Neutral Beams at ITER significantly increases the quantity of D in the fuel cycle
- Introduces an increased D2 and HD flowrate (separate from DT)
- To help manage the regen flow there are options to either bulk storage or send directly ISS
- Challenging product purity requirements on ISS – very low T and H in deuterium
- To avoid build-up in the cycle both H2/D2 venting is needed
- Maximum inventories in the NB are imposed to avoid risk of flammable mixtures > requires regen
- H2/D2 affects cryopump capacity – at ITER our DNB will require multiple regenerations per day for H

Disruption Mitigation - Case Study in a variation to the Fuel Cycle

- Shattered pellet Disruption Mitigation System planned for ITER
- Plan to use H2 (or D2) & Ne
- Equivalent to 1/3 of 3000s (H2) shot delivered within milliseconds
- Increased H2 (D2) load with DT – impacts ISS – large step change in composition
- Extra storage inventory is required to meet rapid DMS turn around demands

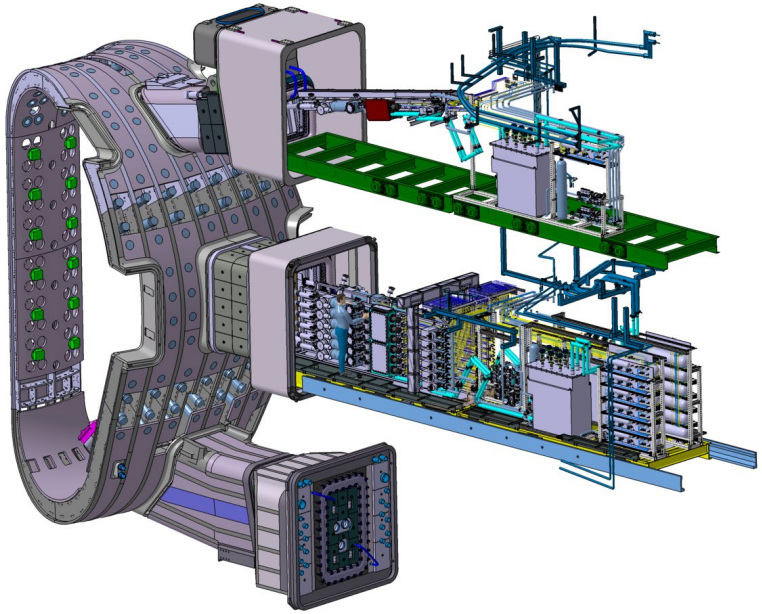

ITER's DMS Design integrated into ports

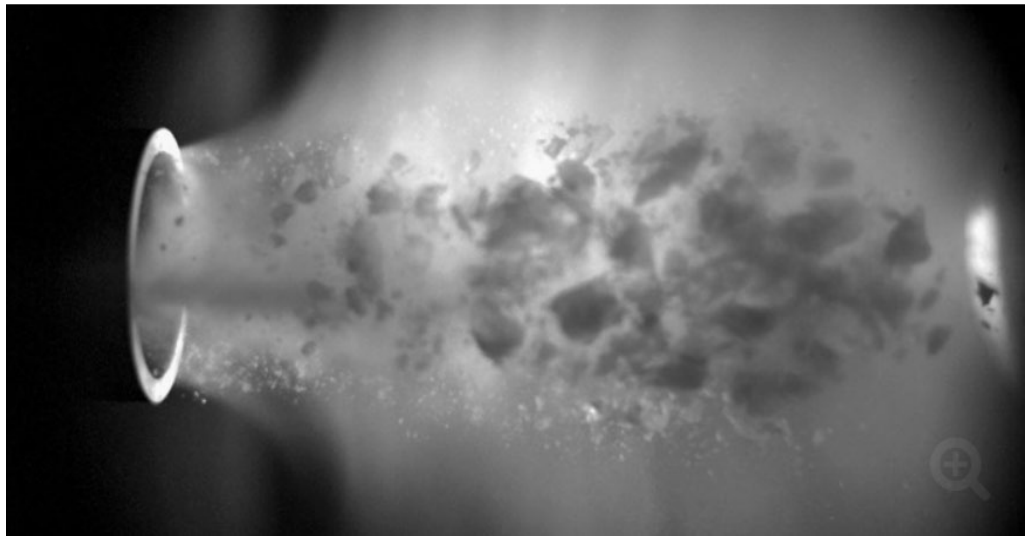

Shattered Pellet experiments

First Wall Choices

- Minor impurities in materials can result in gaseous products that are troublesome to manage in the fuel cycle
  - e.g. uranium in beryllium creating fission products like radioiodine

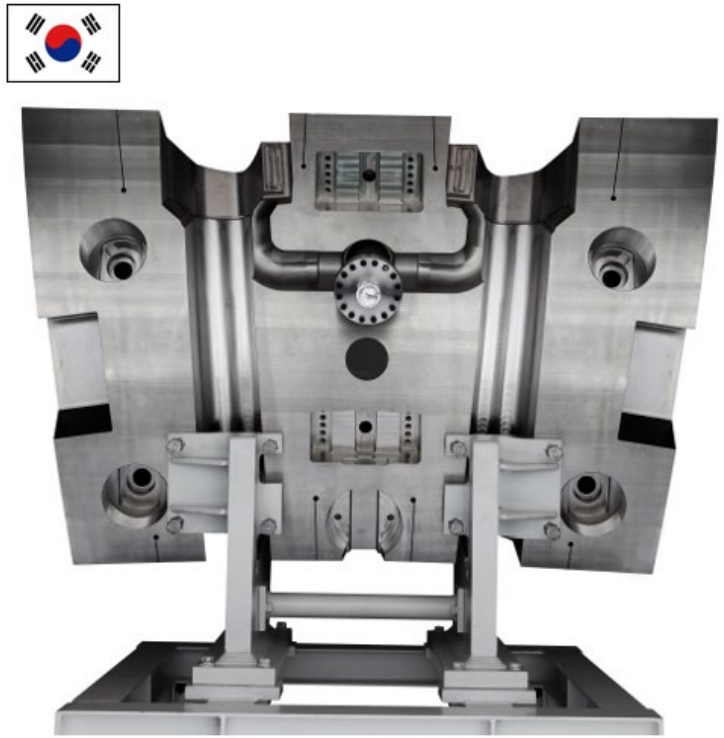

Example first wall components of ITER

Impact of other Gases Fed to Reactor on Fuel Cycle

N2

- Leads to daily 300K regeneration of cryopumps…reduces time available to process NB regen
- Reduces decay time of short lived radioisotopes if present
- Forms tritiated ammonia – which is “sticky”, tritium can be recovered from ammonia though
- Increases equipment size for processing tritiated methane

Argon

- Leads to daily 300K regeneration of cryopumps
- Activation – 41-Argon – requires decay storage
- Reduces decay time of short lived radioisotopes in pumps and tanks (e.g. 37-Ar)
- Increases equipment size for processing tritiated methane

Neon

- Regenerates with hydrogen on cryopumps – reduces the 300K regen frequency
- Doesn’t produce any troublesome by-products
- Doesn’t affect tritiated methane processing or decay storage of short-lived radioisotopes

Pellet Speed Injection

- Pellets have erosion products that have to be processed
- Erosion products increase with pellet speed

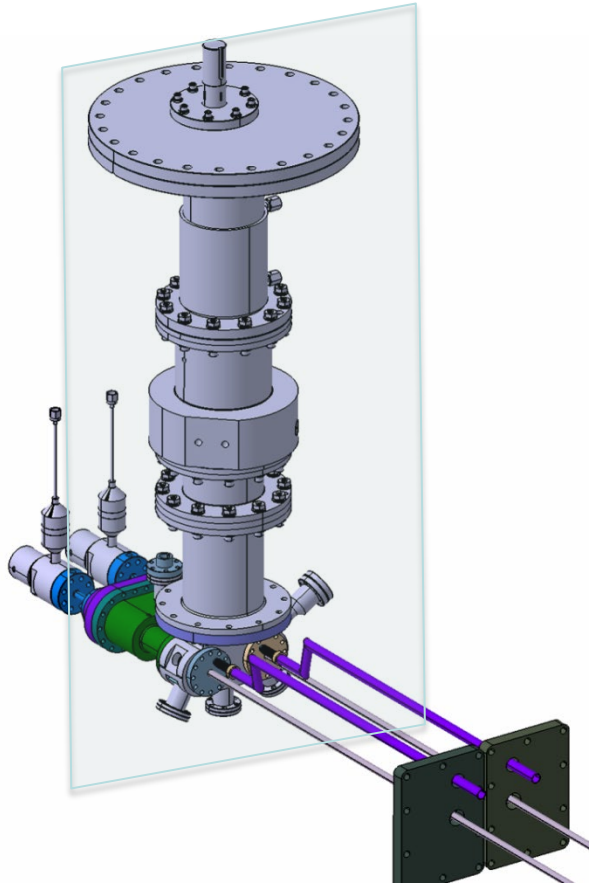

Summary – Fuel Cycle/Physics Relationship

This presentation identified the following physics-fuel (or should it be ***phuel***) cycle relationships:

a) Reduce Burn up fraction -> increasing fuelling rate -> increased size of fuel cycle

b) Increased T2 core -> limits recycling -> increased size of fuel cycle (ISS size)

c) Higher purity -> increases complexity -> increased size of fuel cycle (ISS size)

d) Neutral Beams -> increases D2 processing & purity – increased size of fuel cycle

e) Impurities First Wall -> minor radioisotopes to process -> increase size (decay tanks)

f) Seeding gas -> tritiated by-products & 300K regen frequency -> increased size of fuel cycle

g) Higher Pellet speed -> increased erosion –> increased size of fuel cycle