IAEA-CN301-xxx

Applications of Proton Induced X-rays at the Tandem Accelerator Laboratory of NCSR ‘Demokritos’

Andreas Karydas

Michail Axiotis

Anastasios Lagoyannis and

Sotirios Harissopulos

Institute of Nuclear and Particle Physics, NCSR “Demokritos”

(karydas@inp.demokritos.gr)

Outline

- Quasi-monochromatic X-ray beams induced by energetic protons
- Fundamental atomic studies & Analytical Applications
- The new external Ion Beam Analysis set-up
- Current activities in Cultural Heritage

Quasi-monochromatic x-ray beams by energetic MeV protons

Motivation:

Inner shell ionization by tunable X-rays overpass significantly proton/electron induced ionization cross sections

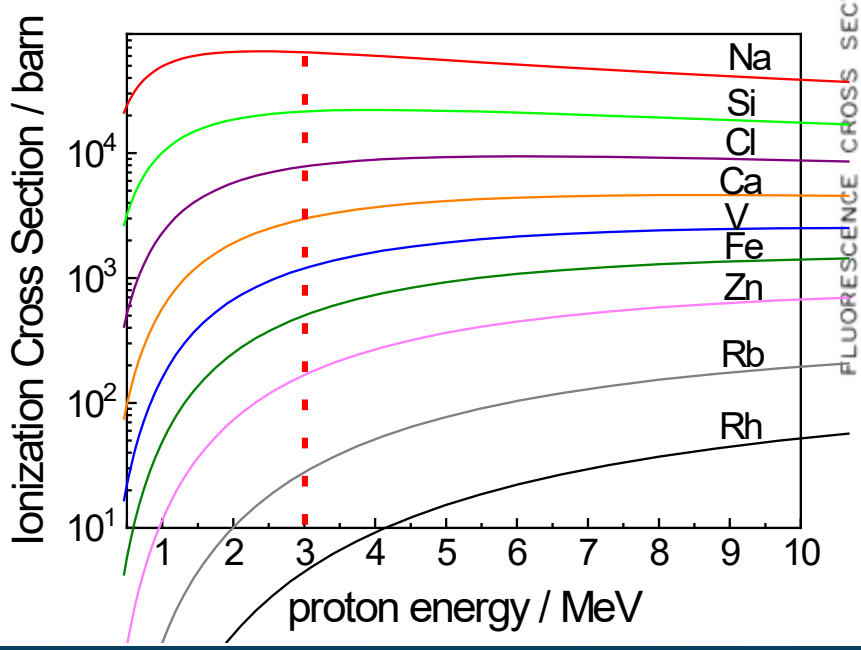

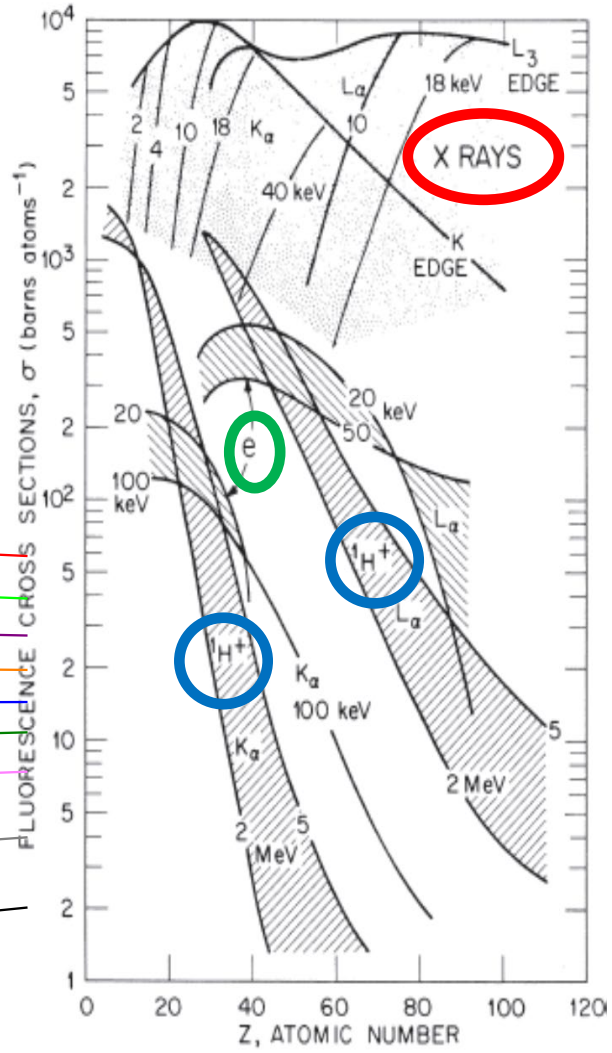

Pros:

- Large ionization cross sections
- Energy selection (primary target selection)
- High degree of monochromaticity
- Good theoretical description of PIXE underlying physical interactions (FP databases generally accurate within 2-5%, 1-3 MeV, K-shell ionization)

Cons:

- Isotropic emission (4π)
- Backscattered protons
- "Nuclear" background (gamma rays/ neutrons)
- Significant decrease of inner-shell ionization cross sections vs Z)

Monochromaticity of proton induced X-rays

- Atomic Bremsstrahlung (AB)
- Quasi Free Electron Bremsstrahlung (QFEB)
- Secondary Electron Bremsstrahlung (SEB)
- Nuclear Background

- 3 MeV protons on thin Cu target
- Filter: Kapton 127 μm

$I_{Brem} / I_{Char} \sim 0.5\%$

$I_{Brem} / I_{Char} \sim 1$ (electron -excitation)

- Filter: Ni 20 μm

$(I_{Brem} + I_{K\beta}) / I_{K\alpha} \sim 0.2\%$

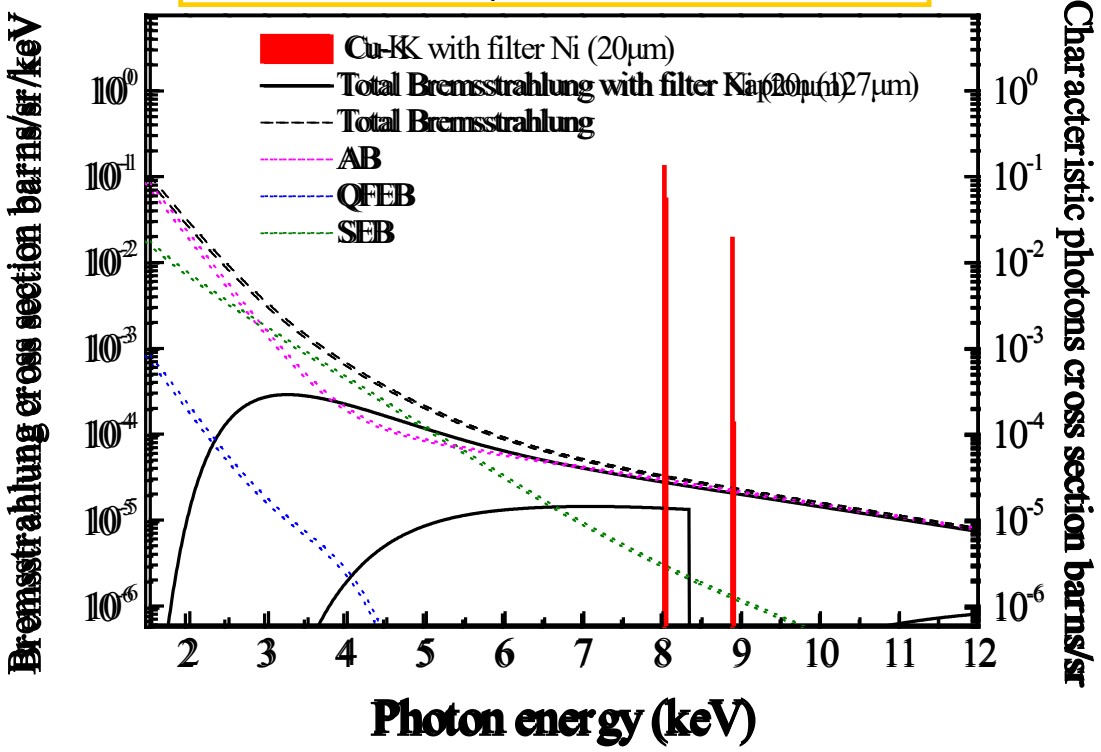

PIXE-XRF setup – Production of monochromatic x-ray beams

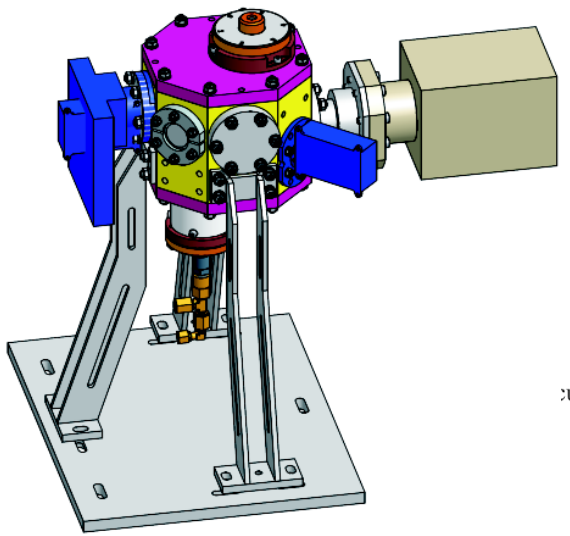

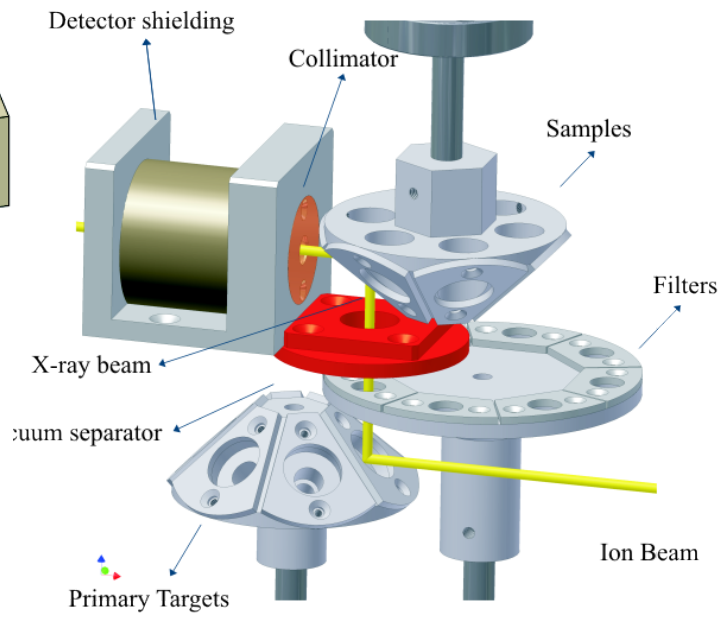

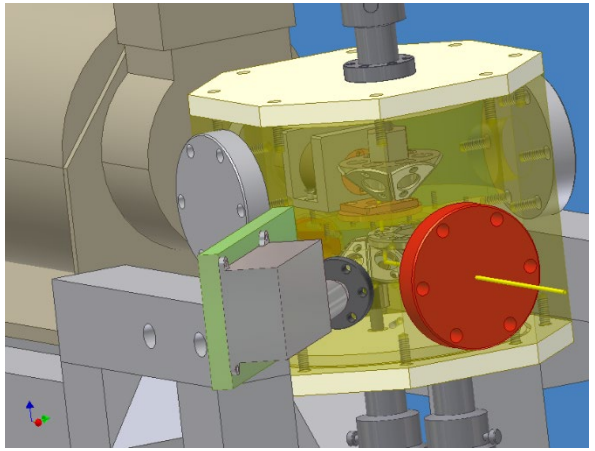

D. Sokaras, PhD thesis 2010

- Two levels chamber (low level: primary targets, upper level: samples for analysis)
- Two rotatable feedthroughs for positioning 6 primary targets and samples
- Primary target feedthrough electrical isolated & liquid cooled
- Filter wheel with 8 positions for stopping the backscattered ions and enabling filtering of the exciting x-ray beam
- Vacuum environment
- An x-ray UTW Si(Li) detector

X-ray beam flux estimations @ sample position

- Protons energy up to 1.75 MeV (due to gamma rays background)
- Case: ~1 μA proton beam
- Solid angle: 19 msr
- Appropriate filter (Kapton + Polyethylene) for the elimination of the backscattered protons (minimizing the x-ray beam attenuation)

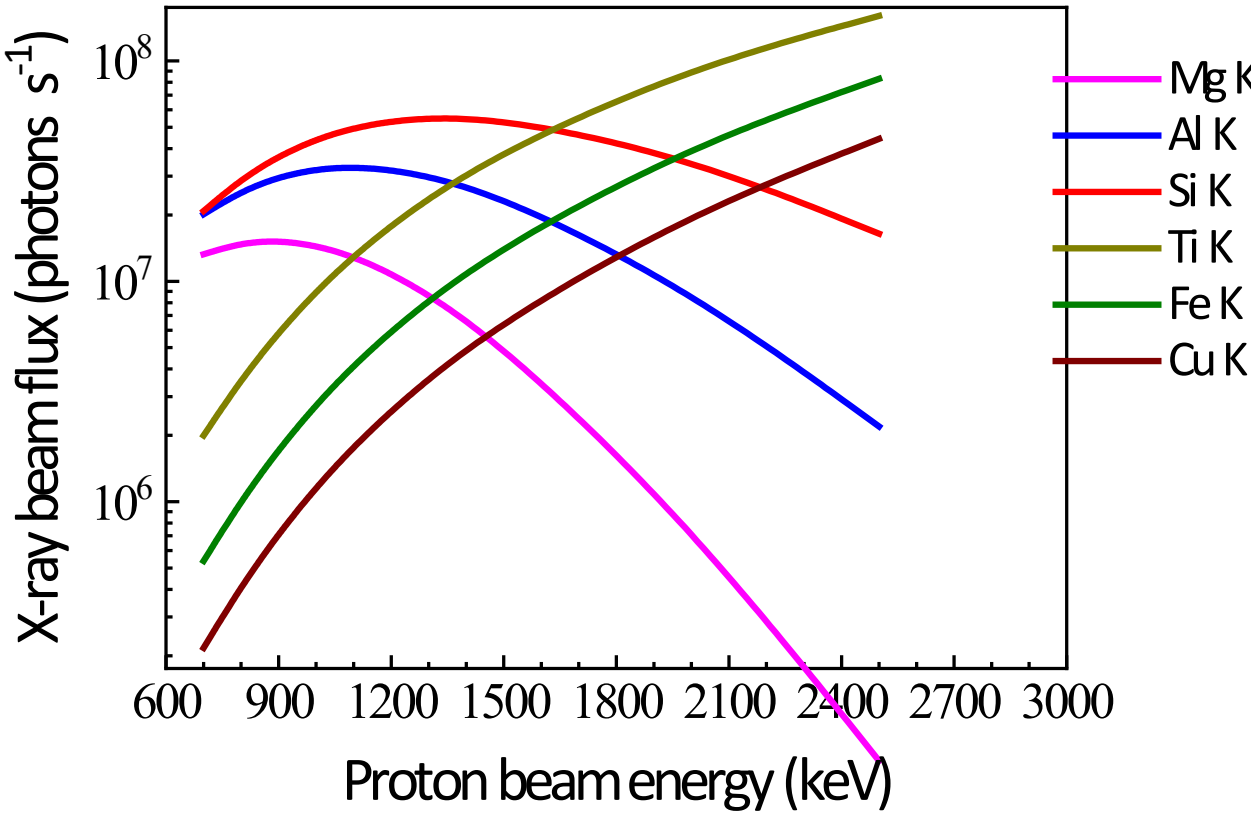

Synchrotron radiation beamlines: 10^8-10^{12} ph/s

Sokaras et al., Review of Scientific Instruments 83, 123102 (2012)

Study of the cascade Fe-L emission

The cascade process refers to the satellite emission by a multiple ionized atom

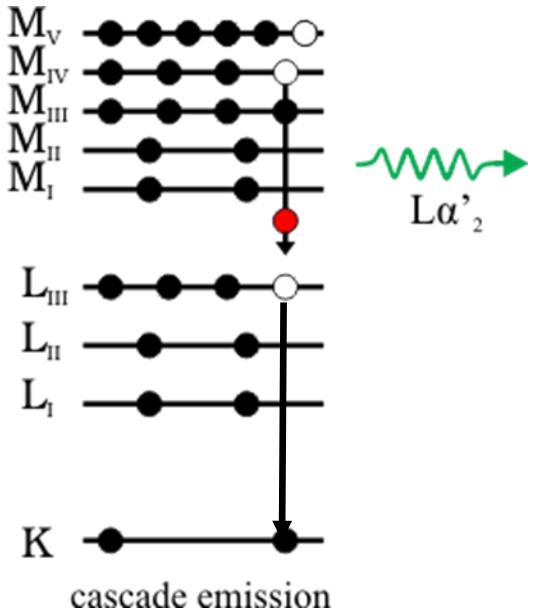

Cascade Emission: X-ray emission due to relaxation of an electronic vacancy created **indirectly** by the relaxation of innermost shell and **not** due to a direct ionization.

*D. Sokaras et al., Physical Review A **83**, 052511 (2011)*

- Unpolarized monochromatic x-ray beams (1.5- 8.63 keV), using different pure thick targets
- Sample: Bulk metallic Fe target
- Fe-Lα FWHM~ 80 eV
- ab initio theoretical calculation based on Pauli-Fock approximation

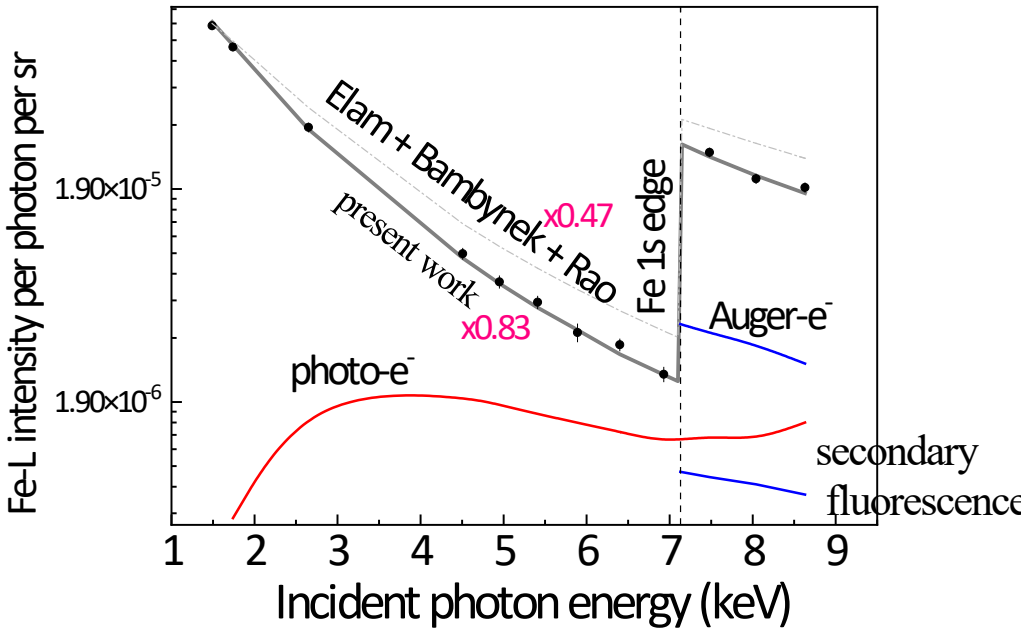

X-ray resonant Raman Scattering – RRS

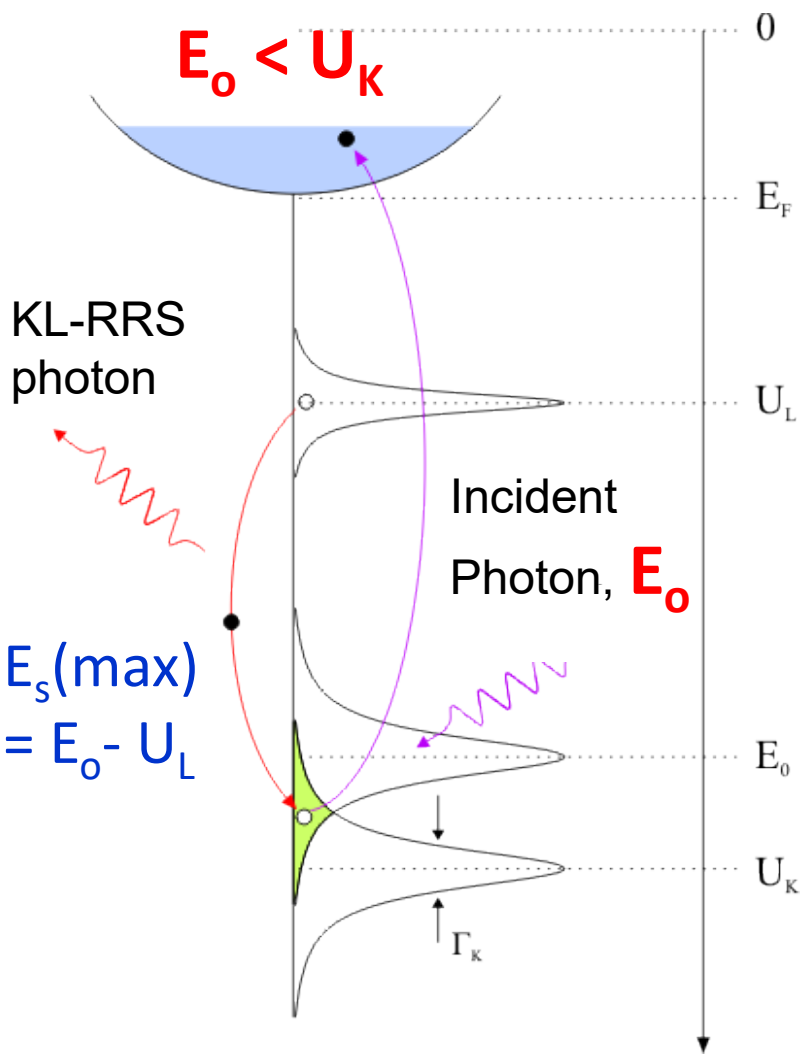

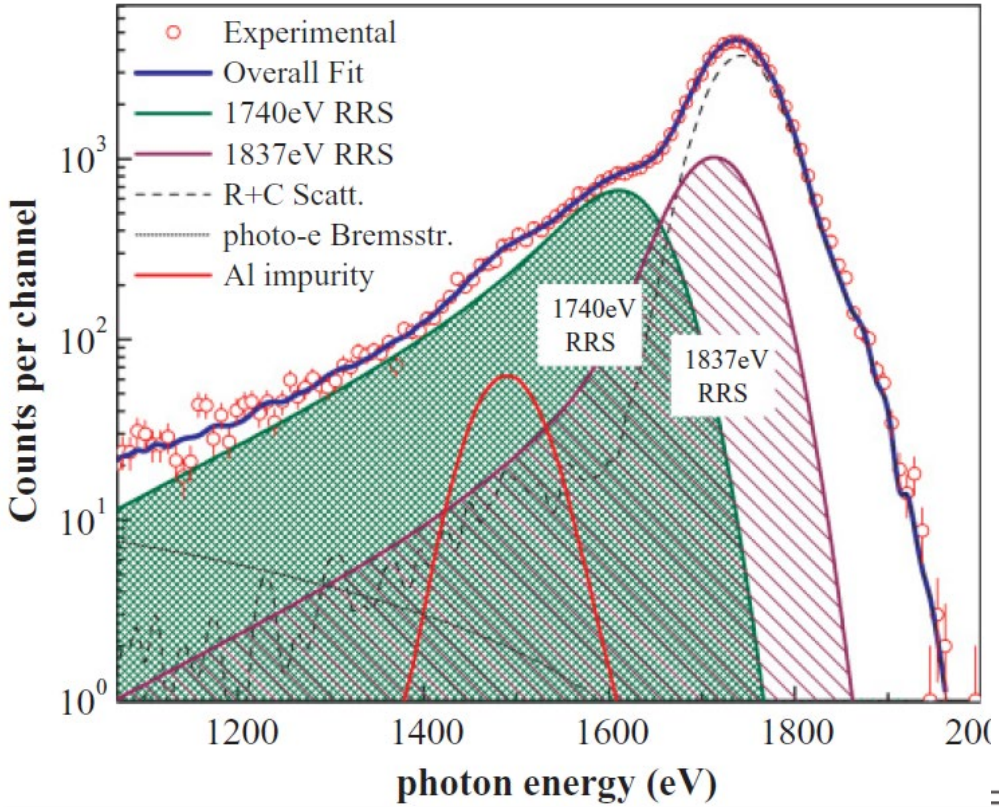

Exciting energy Si-Kα has energy 99 eV less than the Si K edge

Element	Photon energy (eV)	This work $\frac{d\sigma_{RRS}}{d\Omega}$ (r_0^2 sr^{-1}) Unpolarized	This work Polarized	Previous works $\frac{d\sigma_{RRS}}{d\Omega}$ (r_0^2 sr^{-1}) Unpolarized	Previous works Polarized
Si	1740	5.5 ± 0.6	–	5.3 ± 0.7	5.1 ± 0.4[b] 5.4 ± 0.6[a]

D. Sokaras et. al, Phys. Rev. A, 2010, 24, 611

Tunable energy XRF analysis

SOIL-1, IAEA Reference Material

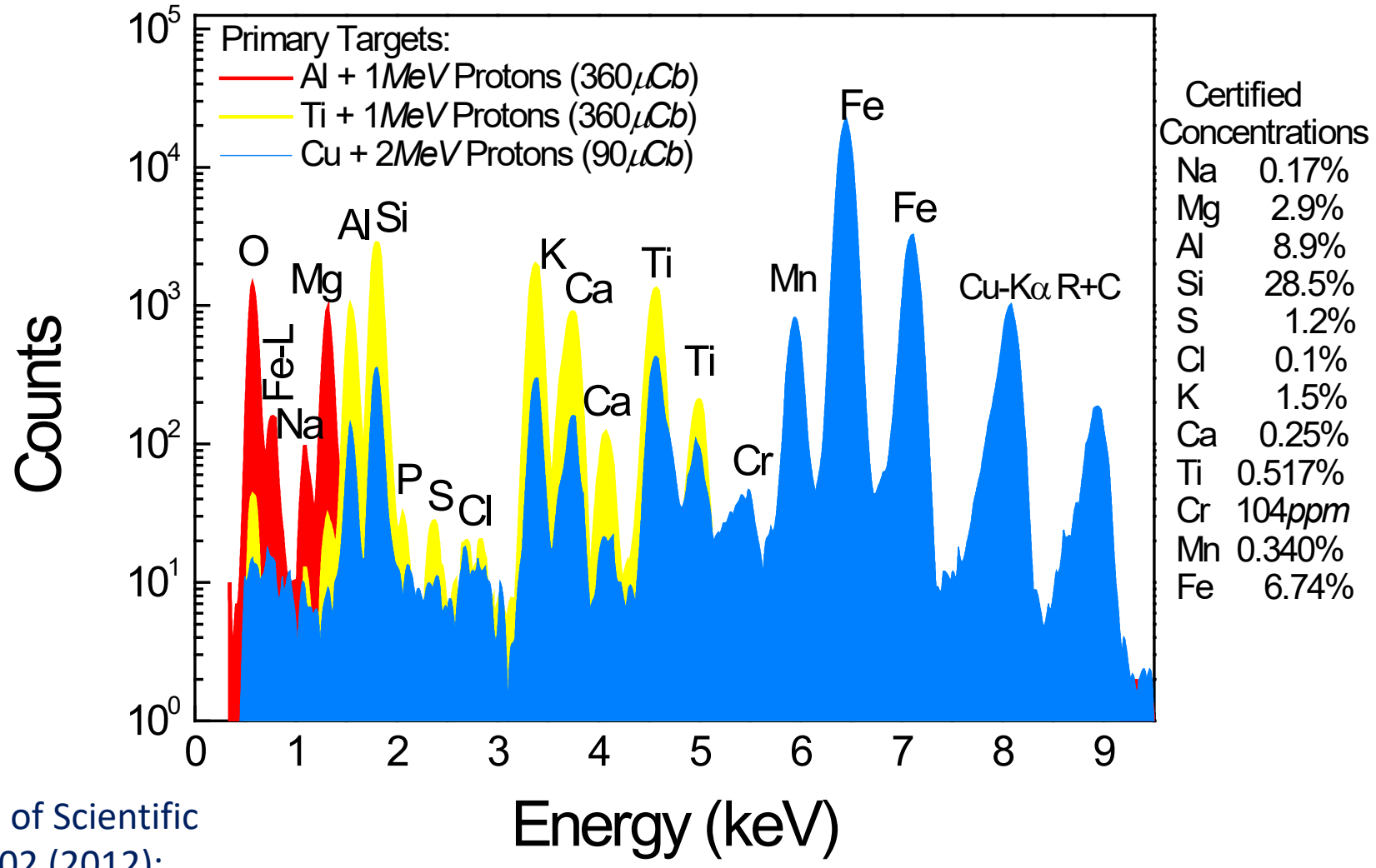

Certified Concentrations

Na	0.17%
Mg	2.9%
Al	8.9%
Si	28.5%
S	1.2%
Cl	0.1%
K	1.5%
Ca	0.25%
Ti	0.517%
Cr	104*ppm*
Mn	0.340%
Fe	6.74%

Sokaras et al., Review of Scientific Instruments 83, 123102 (2012);

The new external IBA set-up at NCSR Demokritos, Greece

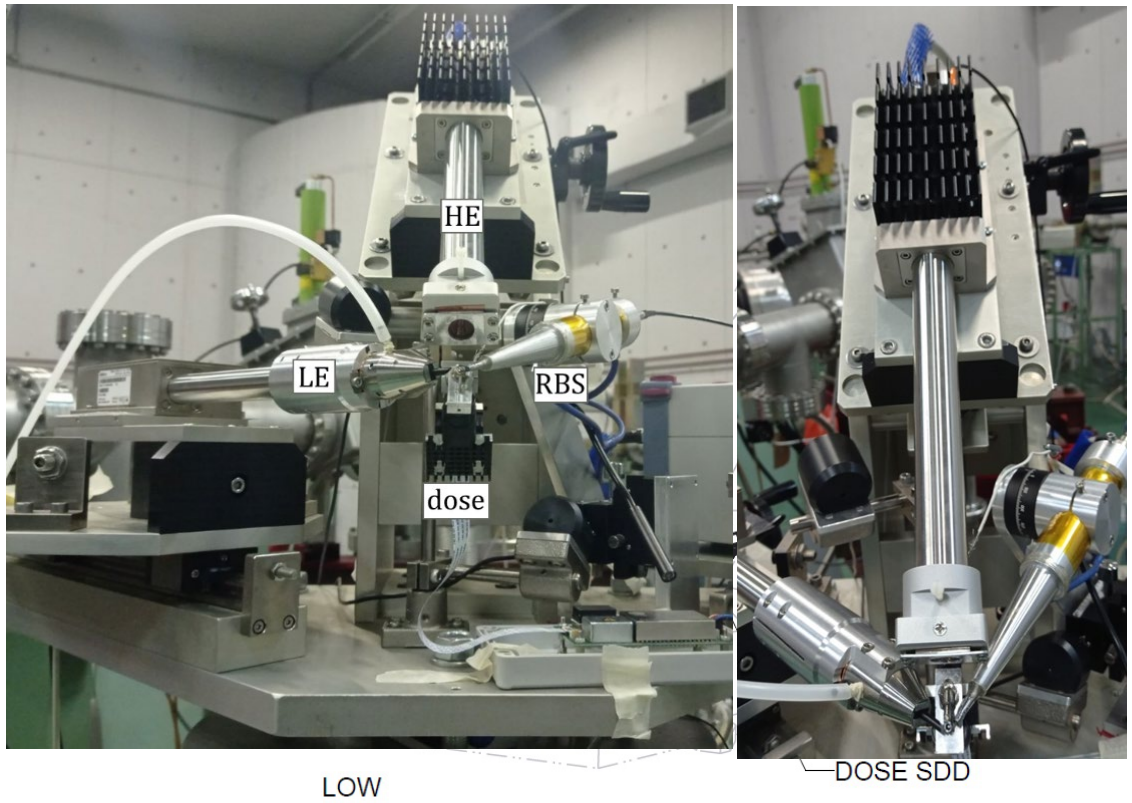

3x Silicon Drift Detectors

- ✓ 150 mm^2 High Energy
- ✓ 30 mm^2 Low Energy
- ✓ 50 mm^2 Dose monitor

2x DANTE
Digital Signal Processors

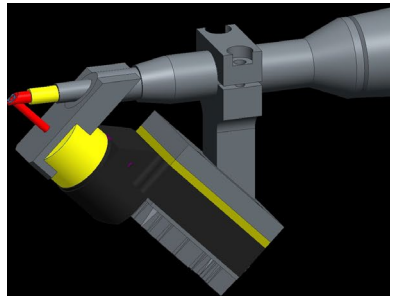

Cluster of Accelerator Laboratories for Ion-Beam Research and Applications
ΕΠΑνΕΚ 2014–2020
ΕΠΙΧΕΙΡΗΣΙΑΚΟ ΠΡΟΓΡΑΜΜΑ
ΑΝΤΑΓΩΝΙΣΤΙΚΟΤΗΤΑ • ΕΠΙΧΕΙΡΗΜΑΤΙΚΟΤΗΤΑ • ΚΑΙΝΟΤΟΜΙΑ
www.antagonistikotita.gr
Με τη συγχρηματοδότηση της Ελλάδας και της Ευρωπαϊκής Ένωσης

First quantitative results

26 CRMs			
APM	**Geological**	**Biological**	**Gold alloys**
NIST 2783	IAEA Soil 7	NIST 1571	Fischer ABKMF
UCD High	IAEA Chinese Ceramic	GBW07605	Fischer ABLLI
UCD New	NIST 679	NOAA MA-A-2	Fischer ABSBL
	ISE 952	NOAA 1566a	Fischer ABQAQ
Glass	GBW07307	Dorm2	
NIST 1412	GBW07316	Tort 2B	**Bronze alloys**
NIST 620		NIST 177c	NIST 1107
BAM S005		IAEA A13	
		CTA-VTL-2	

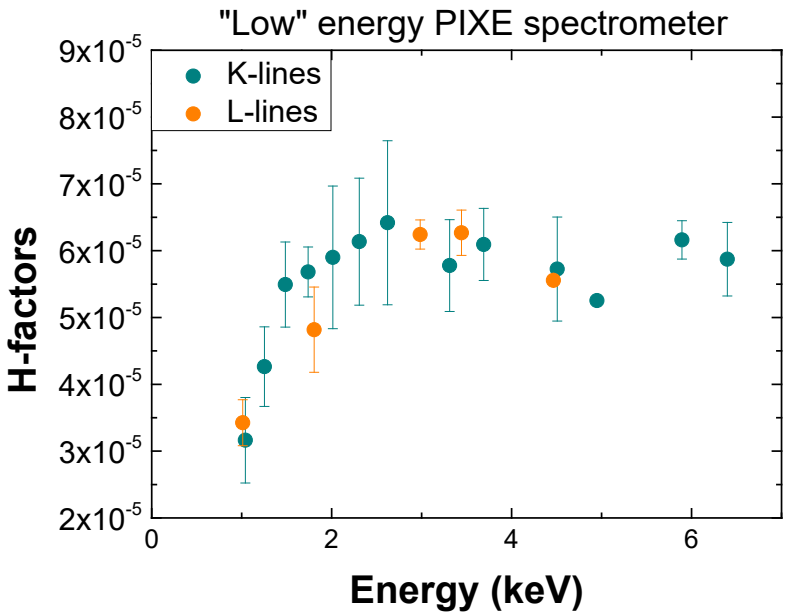

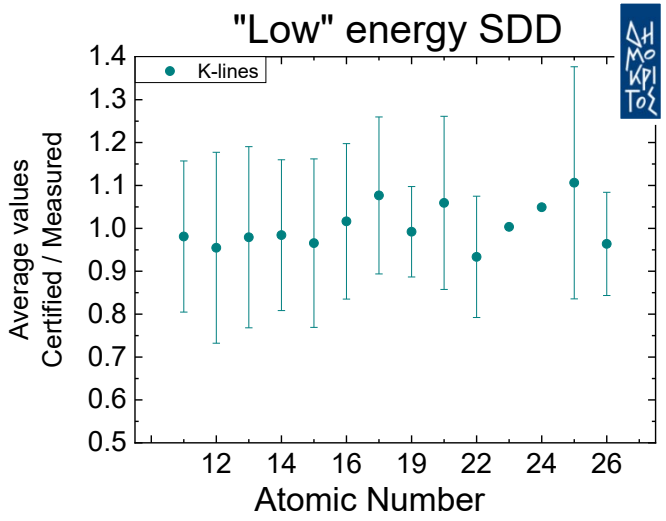

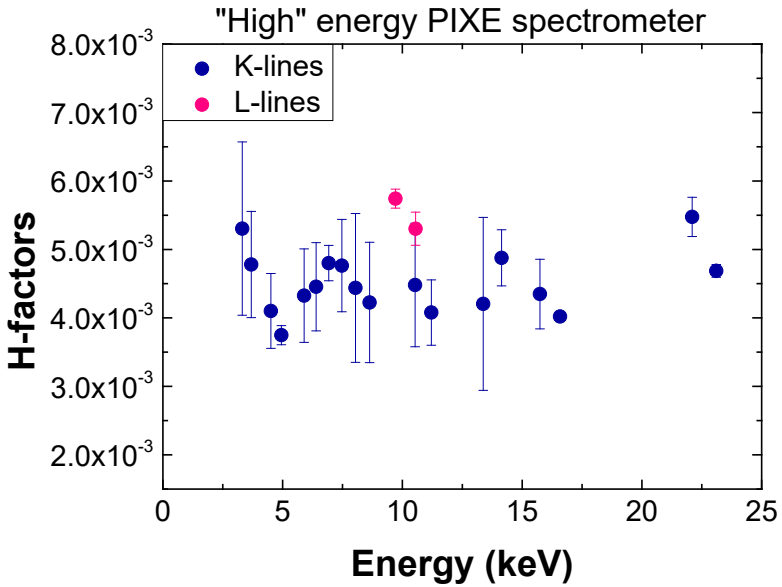

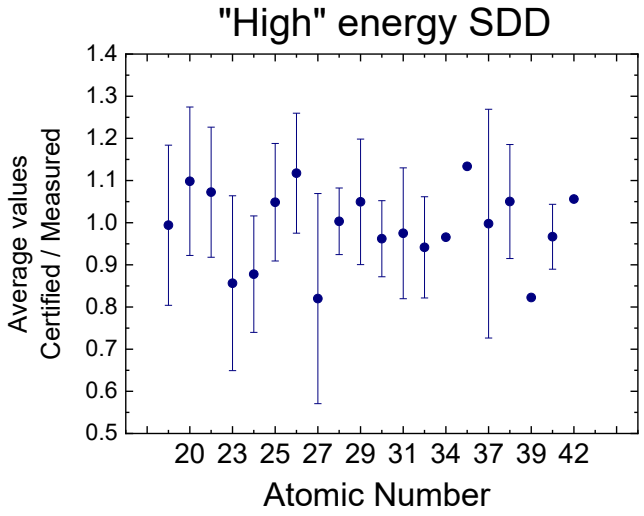

Limits of Detection for Glass matrix

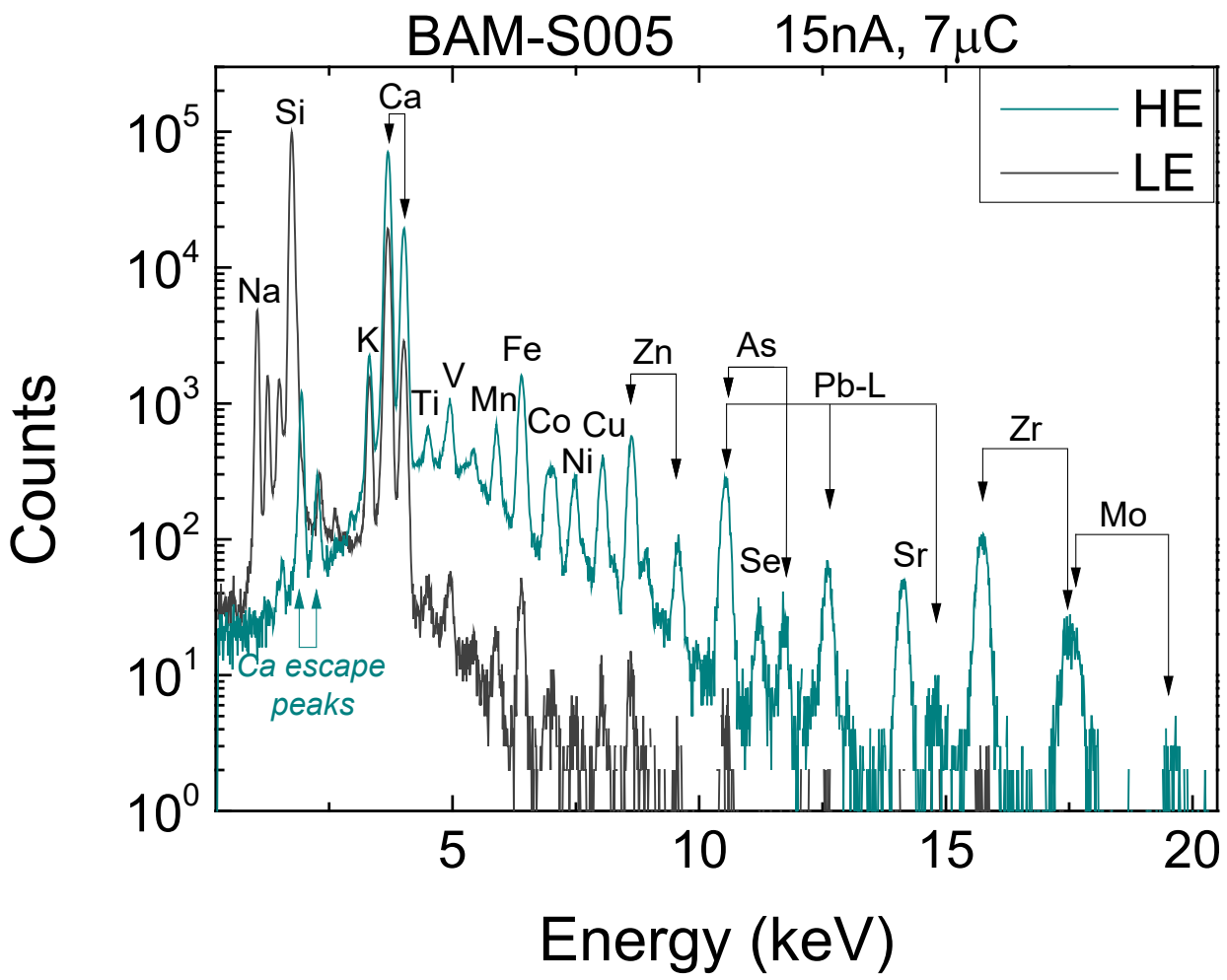

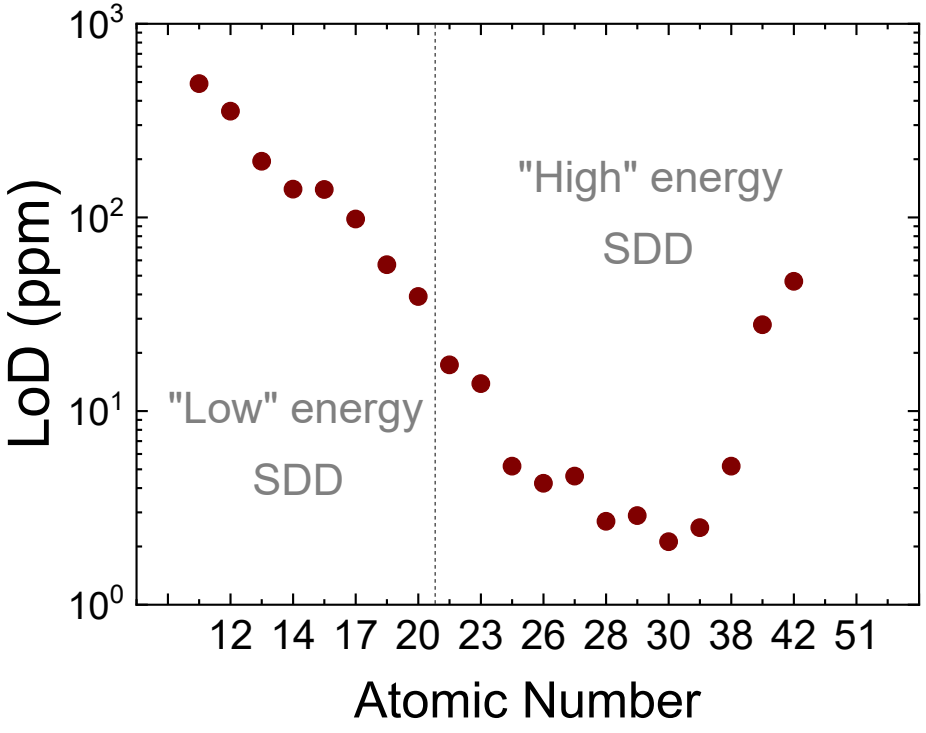

Limits of Detection: 3.05 MeV protons, 15nA, 7μC, ~ 8 min

Myc- MVP: Mycenaean Vitreous Production (2022-2023)

- **A novel interdisciplinary approach towards resolving critical taxonomy issues**

Glass: Network former (SiO_2)+ Network modifier [Alkali metals/earths (Na_2O, K_2O, CaO)] + Colorants (Metallic oxides)
Faience: **Body** : 80-99% SiO_2, 0-3% Na_2O, 1-5% CaO and small amounts of K_2O, CuO, Al_2O_3, Fe_2O_3, TiO_2, MgO **+**
Glaze: a paste, slurry or glazing mixture of alkalis (plant ash or natron) + Cu compound

Both materials do suffer **a great degree of degradation.** Two primary factors affect the rate of decay**: (1) the composition of the vitreous material and (2) the environment.** The final corrosion state of the artifact imposes constraints on its taxonomy, since it loses the glassy state/glaze and with degradation yielding similar optical effects telling glass apart from faience is often challenging

SPRINGBOARD: The degree, extent and nature of degradation of vitreous materials critically distorts the visual characteristics of the artefacts, affecting the way in which the material can be classified, studied and interpreted by archaeologists, conservation scientists and archaeometrists

- *To what extent can the correlation of chemical groupings and microscopic and macroscopic imaging investigation along with literature review can resolve the issue of identification of vitreous materials?*

- **PIXE+RBS is expected to shed light and significantly contributes towards resolving the taxonomy issues**

Thank you

Acknowledgements: Kalliopi Tsampa, Maria Kaparou and D. Sokaras

CALIBRA
Cluster of Accelerator Laboratories for Ion-Beam Research and Applications

ΕΠΑνΕΚ 2014-2020
ΕΠΙΧΕΙΡΗΣΙΑΚΟ ΠΡΟΓΡΑΜΜΑ
ΑΝΤΑΓΩΝΙΣΤΙΚΟΤΗΤΑ • ΕΠΙΧΕΙΡΗΜΑΤΙΚΟΤΗΤΑ • ΚΑΙΝΟΤΟΜΙΑ

Ευρωπαϊκή Ένωση
Ευρωπαϊκό Ταμείο Περιφερειακής Ανάπτυξης

ΕΛΛΗΝΙΚΗ ΔΗΜΟΚΡΑΤΙΑ
ΥΠΟΥΡΓΕΙΟ ΟΙΚΟΝΟΜΙΑΣ & ΑΝΑΠΤΥΞΗΣ
ΕΙΔΙΚΗ ΓΡΑΜΜΑΤΕΙΑ ΕΤΠΑ & ΤΣ
ΕΙΔΙΚΗ ΥΠΗΡΕΣΙΑ ΔΙΑΧΕΙΡΙΣΗΣ ΕΠΑνΕΚ

ΕΛΛΗΝΙΚΗ ΔΗΜΟΚΡΑΤΙΑ
ΥΠΟΥΡΓΕΙΟ ΠΑΙΔΕΙΑΣ, ΕΡΕΥΝΑΣ & ΘΡΗΣΚΕΥΜΑΤΩΝ

ΓΓΕΤ
ΓΕΝΙΚΗ ΓΡΑΜΜΑΤΕΙΑ ΕΡΕΥΝΑΣ ΚΑΙ ΤΕΧΝΟΛΟΓΙΑΣ

ΕΣΠΑ 2014-2020
ανάπτυξη - εργασία - αλληλεγγύη

www.antagonistikotita.gr
Με τη συγχρηματοδότηση της Ελλάδας και της Ευρωπαϊκής Ένωσης