IAEA-CN301-131

REVIEW OF THE DIFFERENT ACCELERATOR-BASED BNCT FACILITIES WORLDWIDE AND AN ASSESSMENT ACCORDING TO THE ALARA CRITERION

María Eugenia Capoulat & Andrés J. Kreiner

Accelerator Technology and Applications Department, National Atomic Energy Commission-CNEA-Argentina

(kreiner@tandar.cnea.gov.ar & capoulat@tandar.cnea.gov.ar)

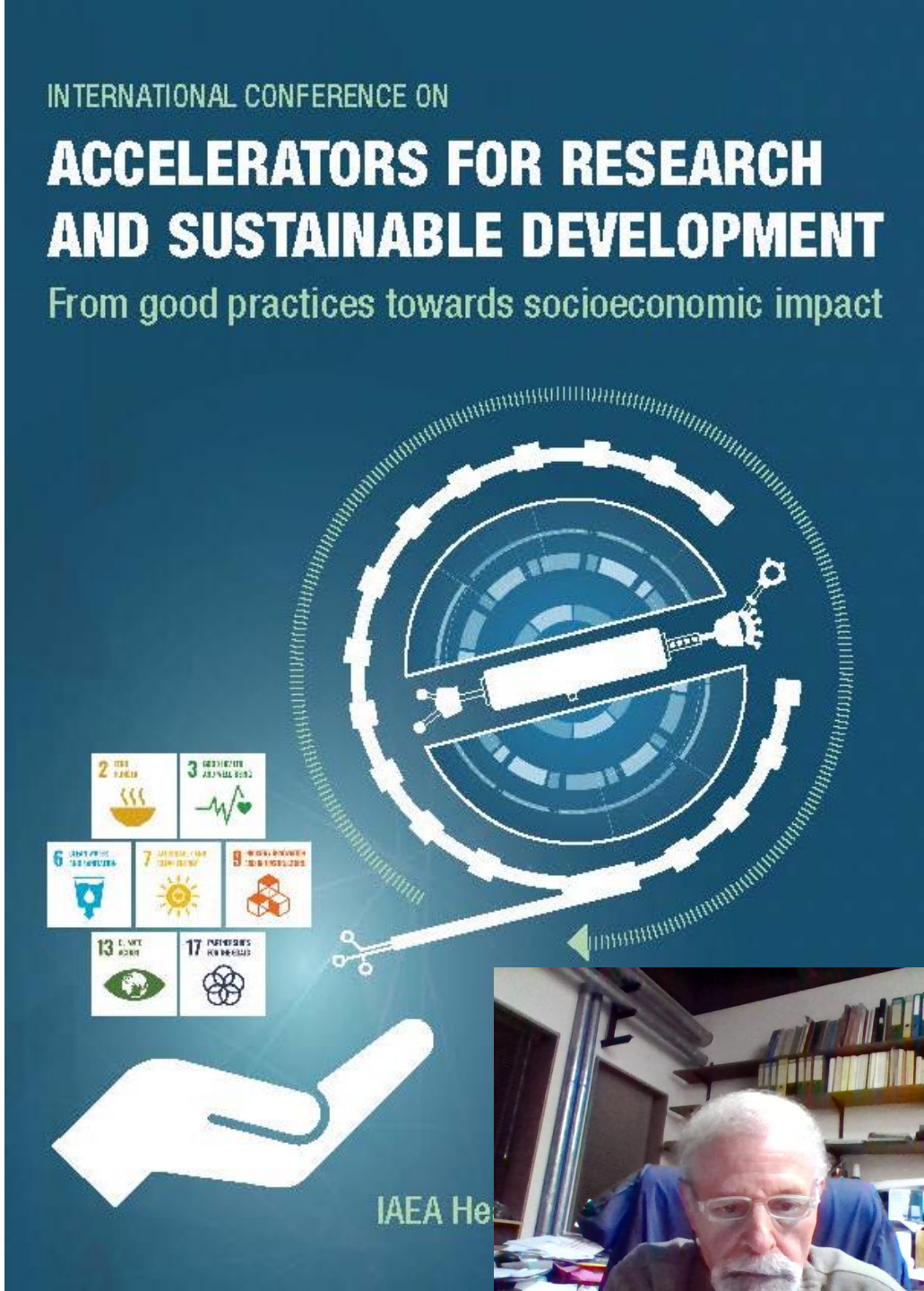

Introduction.

- **Aim: To evaluate and assess the long-term operation sustainability of a representative group of AB-BNCT facilities from the point of view of activation, both at the target (by the primary beam) and at the Beam Shaping Assembly (BSA) (by neutrons).**

- **ALARA: Generation of radioactivity and exposure to ionizing radiation should be As Low As Reasonable Achievable.**

- **Applying ALARA to AB-BNCT Facilities: Residual Radioactivity**
  - **Target and beamline (primary beam + neutrons)**
  - **Beam Shaping Assembly (BSA) and shielding (neutrons)**
  - **Any other material exposed to neutrons (treatment room, etc).**

IAEA SAFETY GUIDE RS-G 1.7

Levels of clearance (in Bq/g) for bulk materials containing radionuclides of artificial and natural origin.
Clearance: removal of radioactive materials within authorized practices from any further regulatory control by the Regulatory Body (RB).
Reference for national regulation.

IAEA SAFETY REPORTS Series Nº44

General approach for deriving the activity concentration values for exclusion, exemption and clearance.
Effective dose <10 μSv/y (average over several "scenarios").
Effective dose < 1 mSv/y for low probability "scenarios".

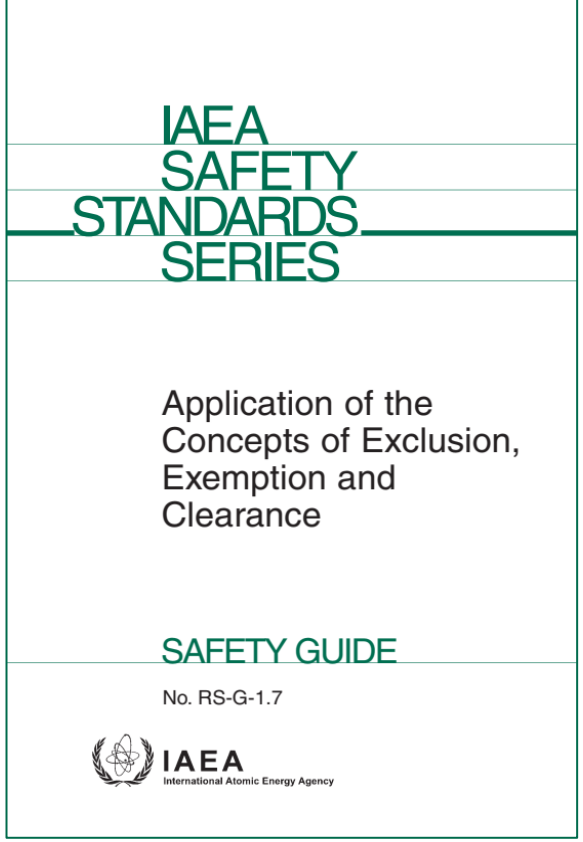

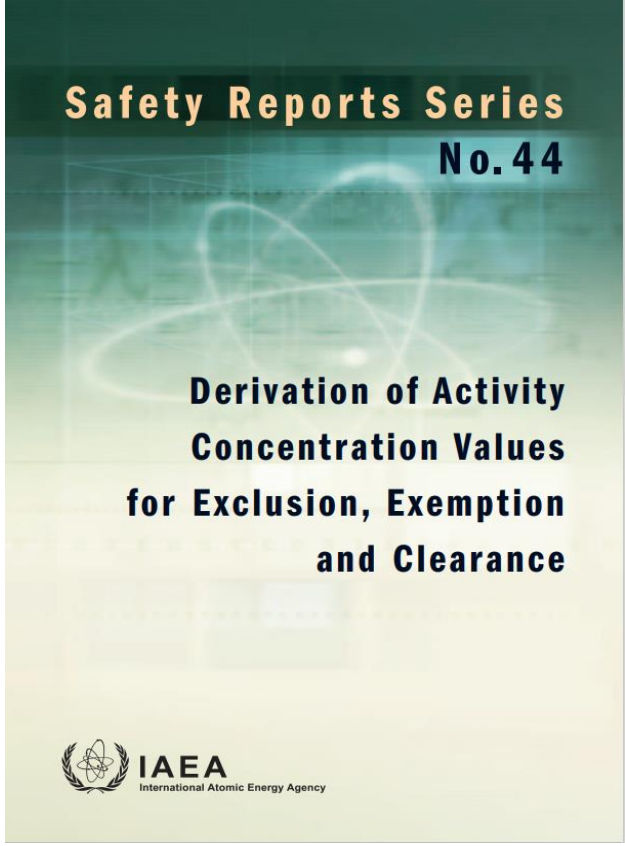

AB-BNCT facilities worldwide.

Based on the neutron production reaction, target material and beam energy, AB-BNCT facilities fit to one of the listed below:

Target-reaction	Beam energy (MeV)	Beam current (mA)	Máx. neutron energy (MeV)	Percentage of yield with energy ≤ 1 MeV	Institute, Country
$^{7}Li(p,n)^{7}Be$	2.3-2.8	10-30	0.79-1.1	100-92	Helsinki Univ. Hospital, Finland. National Cancer Center, Japan. Edogawa Hosp., Japan. Nagoya Univ., Japan. Shonan Kamakura Hosp., Japan. Soreq, Israel. Xiamen Humanity Hosp., China. IHEP, China. Budker Inst., Russia. CNAO, Italy. Birminham Univ., UK. Granada Univ., Spain.
$^{9}Be(p,n)^{9}B$	30	1	28.15	9	Kyoto Univ., Japan. Kansai BNCT RC, Japan. South Tohoku Hosp., Japan.
$^{9}Be(p,n)\,^{9}B$	8-10	10	6.14-8.14	21-17	Tsukuba Univ., Japan. Gachon Univ.-Dawonmax, Korea.
Thin 8 µm $^{9}Be(d,n)^{10}B$	1.45	30	5.76	69	CNEA, Argentina. KIRAMS, Korea
$^{13}C(d,n)^{14}N$	1.45	30	6.72	70	

High-energy & intense beams: Beam energies higher than Coulomb barriers. Possible risk of activation of the beamline and accelerator parts for long-term operation (not analized here, future work).

High-energy neutrons: M
surrounding materials (BSA

Primary activation

Due to the interaction of the proton or deuteron beam with different materials .
Nuclear reactions (p, X), (d, X) leading to radioactive products (X stands for any open reaction channel).

Target

Beam stopper or anti-blistering plate.
Beamline, due to the ‘halo’, scattering on the residual gas.
Any other element where the beam unintentionally hits.

Primary activation

Target activation:

Accumulated activity (over 1 year operation) for different targets at indicated beam energy and current:

^{7}Li+p 2.3 MeV 30 mA	^{9}Be+p 8 MeV 10 mA	^{9}Be+p 30 MeV 1 mA	^{9}Be+d 1.45 MeV 30 mA	^{13}C +d 1.45 MeV 30 mA
5.7 TBq/y (^{7}Be)	Only prompt radiation	1.2 TBq/y (^{7}Be) 51 GBq/y (tritium)	54 GBq/y (tritium)	9.3 GBq/y (tritium) 28 MBq/y(^{14}C)

Radioactive products and nuclear reactions relevant for each target:

	Product and ($T_{1/2}$)	Reaction	Threshold Energy or Q (MeV)
^{7}Li+p	^{7}Be (53.22 d)	^{7}Li(p,n)^{7}Be	E_{tresh}=1.88
^{9}Be+p	^{7}Be (53.22 d)	^{9}Be(p,t)^{7}Be	E_{tresh} = 13.432
		^{9}Be(p,d+n)^{7}Be	E_{tresh} = 20.4
30 MeV		^{9}Be(p,p+2n)^{7}Be	E_{tresh} = 22.9
	Tritium* (12.32 y)	^{9}Be(p,t)^{7}Be	E_{tresh} =13.432
^{9}Be+d	Tritium* (12.32 y)	^{9}Be(d,t)^{8}Be	Q=4.602
^{13}C+d	Tritium* (12.32 y)	^{13}C(d,t)^{12}C	Q=1.312
	^{14}C ** (5700 y)	^{13}C(d,p)^{14}C	Q=5.962

*Pure beta emitter, max. beta energy: 18.6 keV ** Pure beta emitter, max. beta energy: 156.5 keV

Secondary activation

Due to the interaction of neutrons with different materials . Nuclear reactions induced by neutrons (n, X) leading to radioactive products.

BSA & Shielding

Backing materials (copper), heat exchanger, cooling water and water filtration.
Concrete or heavy concrete walls (iron ore, rebar, limestone)
Beamline and accelerator components, due to neutrons scattered backwards from the BSA.
Ancillary equipment, wires.
Target (light and very short-lived products)
Any other element exposed to neutrons.

BSA & Shielding:

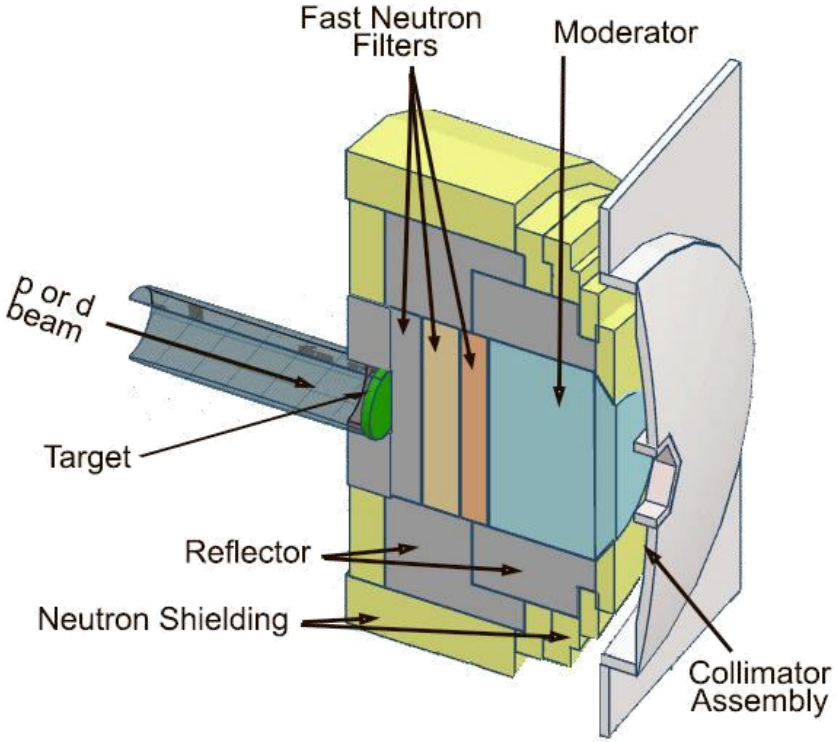

Beam Shaping Assemblies

Based on publications of the different AB-BNCT facilities worldwide, standard BSAs were set up for a representative group of systems:

	E_p or E_d (MeV)	Current (mA)	Moderator	Fast Neutron Filter	Reflector	References
^{7}Li+p	2.3	30	Fluental® MgF_2 or CaF_2	None	Pb	L. Guangru et al., 2021 P.Torres-Sánchez, et al., 2021 A. Uritani, et al., 2017 D. Minsky et al., 2014 D.L. Bleuel et al., 1998 C.N. Culbertson, et. Al, 2004
^{9}Be+p	8.0 30.0	10 1	MgF_2 CaF_2	Pb Pb+Fe+Al	Pb	H. Kumada et al., 2018 H. Tanaka et al., 2009
^{9}Be+d	1.45	30	Teflon+Al	None	Pb	A. Burlón et al., 2008, M.E. Capoulat et. al. 2015
^{13}C+d	1.45	30	Teflon+Al	None	Pb	A. Burlón et al., 2001, M.E. Capoulat et. al. 2015

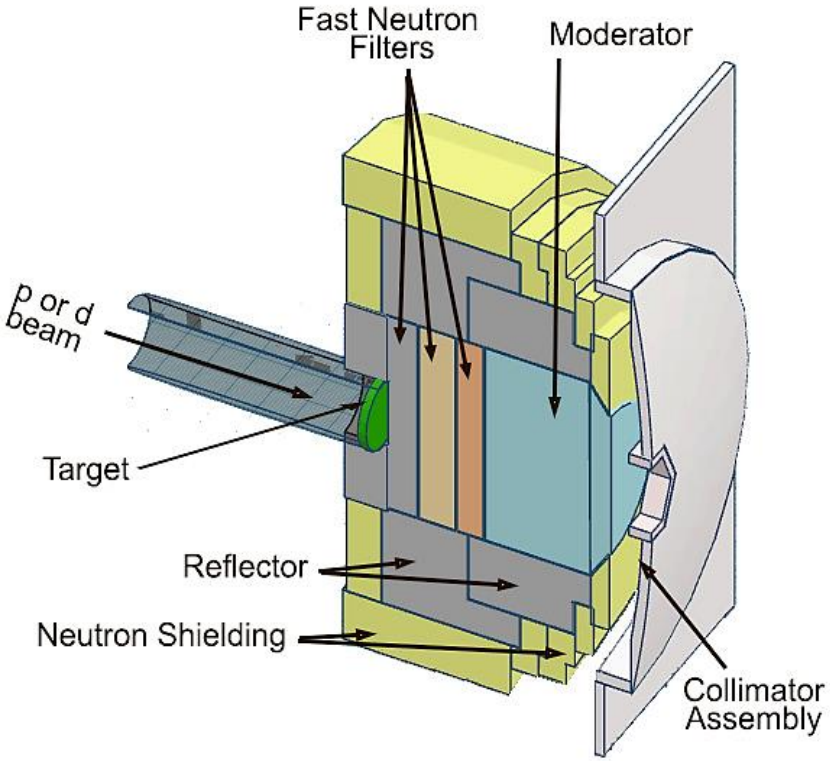

Activity concentrations (Bq/g) accumulated over 1 year operation were calculated with MCNP and compared to IAEA's guideline values in bulk amounts of material:

IAEA RS-G-1.7 Safety Guide: Application of the concepts of exclusion, exemption and clearance.

Secondary activation

BSA & Shielding: Intermediate and long-term activation products in some common BSA materials. **Highlighted** are those which will exceed the clearance level in a few years of operation.

Neutrons up to ~ 1 MeV → ^{7}Li+p

Neutrons up to ~ 6 MeV → ^{9}Be+p @8 MeV, ^{9}Be+d, ^{13}C+d

Neutrons up to ~28 MeV → ^{9}Be+p @30 MeV

The higher the neutron energy, the larger the number of radionuclides & activation

Material	Neutrons up to 1 MeV			Neutrons up to 6 MeV			Neutrons up to 28 MeV		
Fluental	3-H			3-H	24-Na		3-H	24-Na	18-F
							14-C [8]	22-Na	26-Al
MgF_2 (pure)	None			24-Na			24-Na	22-Na	3-H
							18-F	14-C [8]	
CaF_2 (pure)	45-Ca	47-Ca	37-Ar [1]	45-Ca	47-Ca	37-Ar [1]	45-Ca	47-Ca	37-Ar [1]
	39-Ar [2]			39-Ar [2]	43-K	42-K	39-Ar [2]	43-K	42-K
				41-Ar	35-S		41-Ar	35-S	39-Cl
							38-Cl	18-F	42-Ar [3]
							40-K	14-C [8]	32-Si [4]
							3-H	31-Si	38-S
Aluminum (pure)	None			24-Na			24-Na	3-H	26-Al
							22-Na		
Lead (pure)	209-Pb [5]	205-Pb [6]	193-Os	209-Pb [5]	205-Pb [6]	193-Os	209-Pb [5]	205-Pb [6]	193-Os
	197-Pt	200-Pt	203-Hg	197-Pt	200-Pt	203-Hg	197-Pt	200-Pt	203-Hg
	194-Os	200-Au	204-Tl	194-Os	200-Au	204-Tl	194-Os [7]	200-Au	204-Tl
				199-Au	198-Au	3-H	199-Au	198-Au	3-H
							202-Tl	203-Pb	201-Tl
							202-Pb [8]	202m-Pb	201-Pb
Iron (pure)	54-Mn	51-Cr	59-Fe	54-Mn	51-Cr	59-Fe	54-Mn	51-Cr	59-Fe
	55-Fe			55-Fe	56-Mn		55-Fe	56-Mn	53-Mn
							3-H	52-Mn	52-Fe
							49-V	45-Ca	48-V
Lithiated polyethylene (SWX™)	3-H	24-Na	38-Cl	3-H	24-Na	38-Cl	3-H	24-Na	38-Cl
	32-P	35-S	45-Ca	32-P	35-S	45-Ca	32-P	35-S	45-Ca
	47-Ca	37-Ar	39-Ar	47-Ca	37-Ar	39-Ar	47-Ca	37-Ar	39-Ar
				43-K	42-K				
				44-K					

(1) e=100%, no g
(2) 100% b-, max. energy: 565 keV, no g
(4) 100% b-, max. energy: 227 keV, no g
(5) 100% b-, max. energy: 644 keV, no g
(7) Eg= 82.339 keV Pg=0.011%
(8) $T_{1/2}$ ~ 10^3 y, very low induced activity in lifetime of a facility.

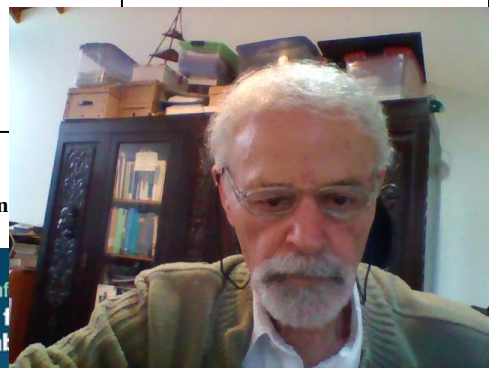

^{7}Li+p (2.3 MeV, 30 mA)

1 year of operation

IAEA RS-G 1.7 Safety Guide: for materials containing a mixture of radionuclides:

$$C = \sum_i \frac{(activity\ concentration)_i}{(clearance\ level)_i} < 1$$

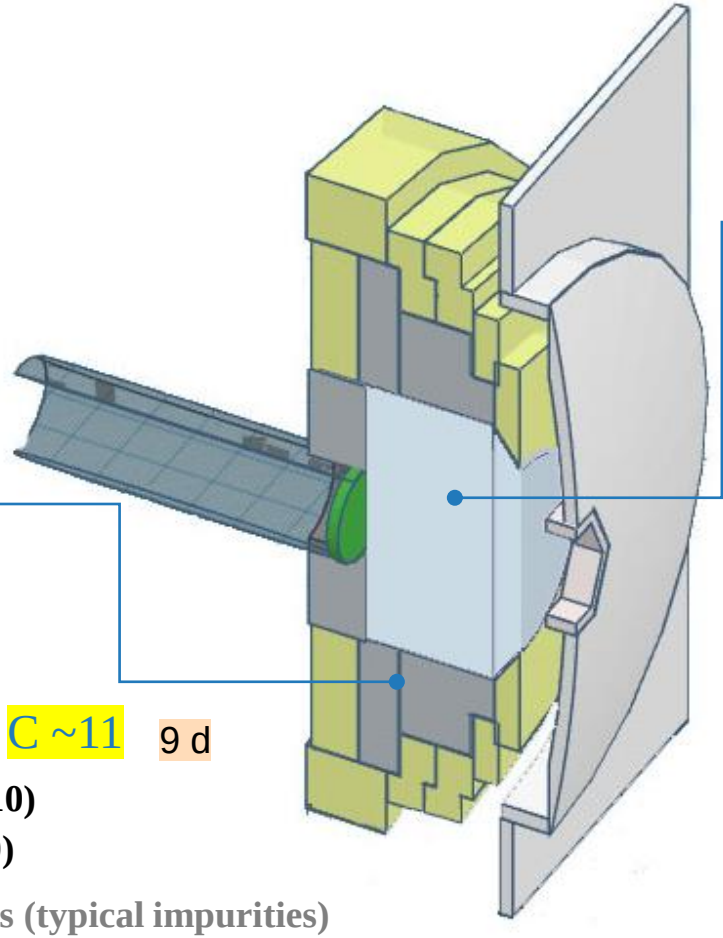

Pure MgF_2 Moderator: C < 1

24-Na: $T_{1/2}$=14.997 h 0.14 Bq/g (1)

Pure CaF_2 Moderator: C = 101 ~3 y

45-Ca $T_{1/2}$=162.61 d 1.1×10^4 Bq/g (100)
47-Ca $T_{1/2}$=4.536 d 13 Bq/g (10)

Fluental Moderator: C = 144 ~90 y

Only 3-H $T_{1/2}$=12.32 y 1.44×10^4 Bq/g (100)

Pure Lead Reflector:

209-Pb: $T_{1/2}$=3.234 h 705 Bq/g
(pure beta emitter)

"Commercially pure" Lead: C ~11 9 d

122-Sb $T_{1/2}$=2.7238 d ~100 Bq/g (10)
76-As $T_{1/2}$=1.0942 d ~10 Bq/g (10)

Coming from activation of Sb and As (typical impurities)

MgF_2 is "cleaner"

^{9}Be+d and ^{13}C+d (1.45 MeV, 30 mA)

1 year of operation

Pure Teflon Moderator: C < 1

14-C: 0.006 Bq/g (1)

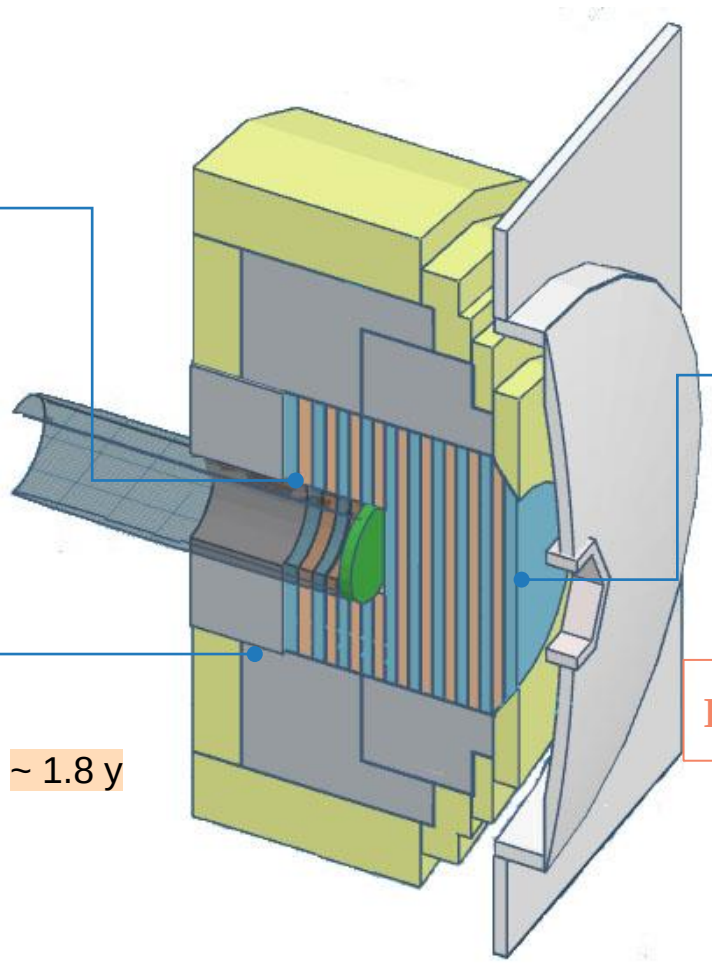

Pure Al Moderator: C = 110 ~ 4 d

Only 24-Na $T_{1/2}$=14.997 h 110 Bq/g (1)

Lead Reflector:

209-Pb: 230 Bq/g (pure beta emitter)

"Commercially pure" Lead: C =23 ~ 1.8 y

Impurities and minor components may be relevant

122-Sb $T_{1/2}$=2.7238 d 160 Bq/g (10)
76-As $T_{1/2}$=1.0942 d 10 Bq/g (10)
65-Zn $T_{1/2}$=243.93 d 0.64 Bq/g (0.1)

Coming from activation of Sb and As (typical impurities)

720 kV accelerator developed at CNEA (1.45 MV is being built)

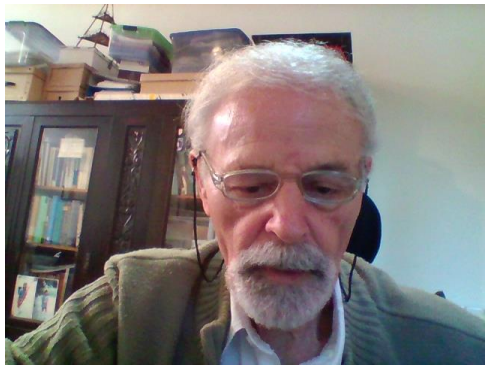

10 mA proton beam entering into the Faraday cup, viewed through the induced fluorescence in the residual gas.

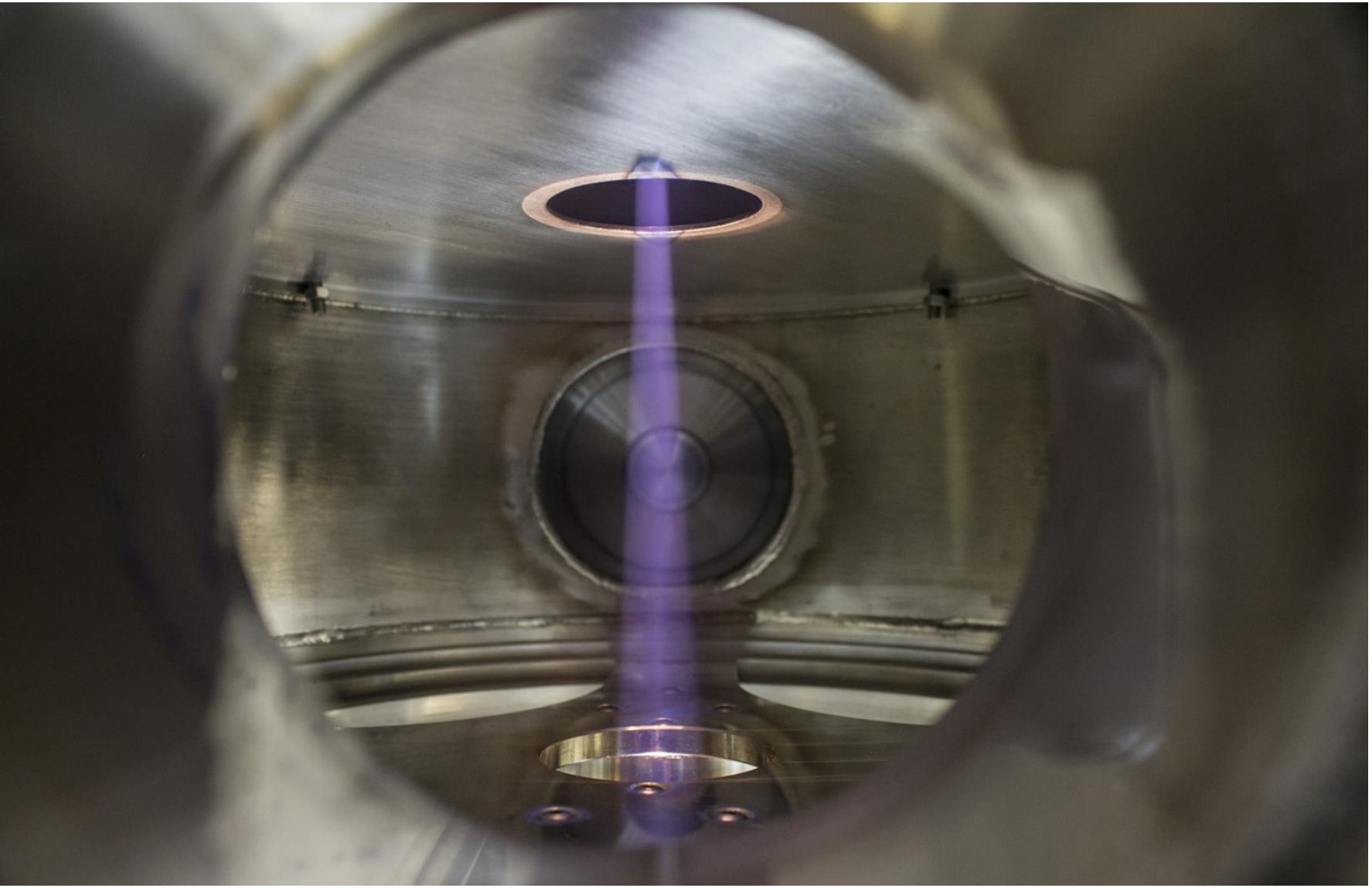

^{9}Be+p (8 MeV, 10 mA)

1 year of operation

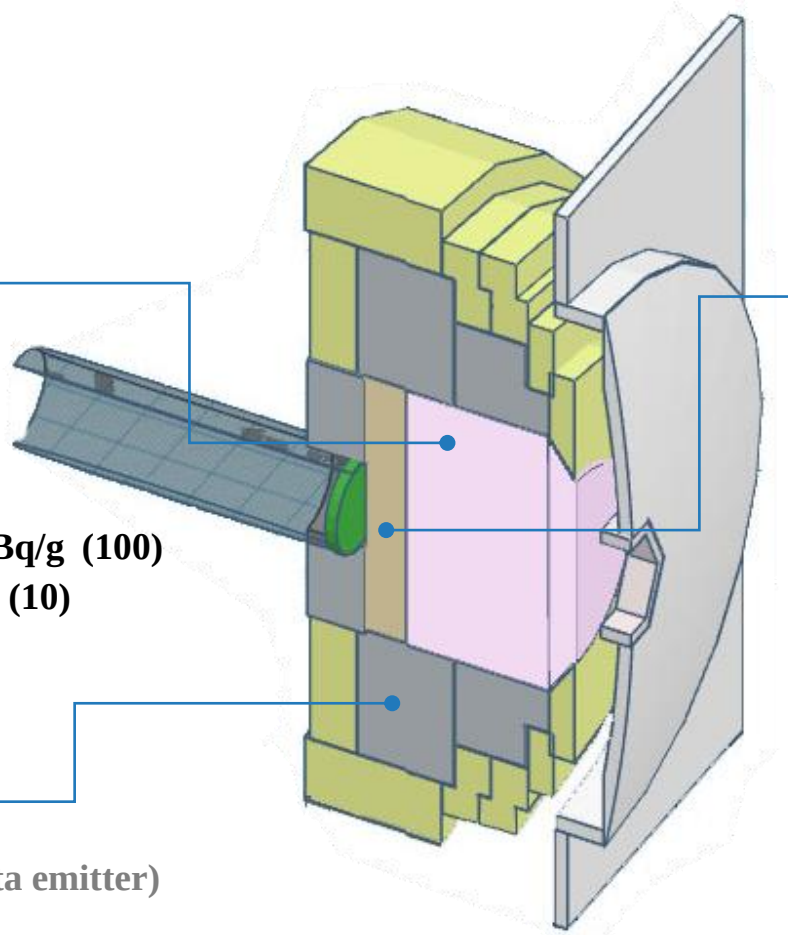

Pure MgF_2 Moderator: : C = 2

Only 24-Na: $T_{1/2}$=14.997 h 2 Bq/g (1)

Pure CaF_2 Moderator: C = 680 ~4.2 y

Most relevant: 45-Ca$T_{1/2}$=162.61 d 6.7×10^4 Bq/g (100)
47-Ca $T_{1/2}$=4.536 d 91 Bq/g (10)

Pure Lead Reflector:

Most relevant: 209-Pb 1.4×10^4 Bq/g (pure beta emitter)

Pure Iron Filter: C = 6.1×10^5 ~16 y

Most relevant: 54-Mn$T_{1/2}$=312.2 d 6.0×10^4 Bq/g (0.1)
56-Mn $T_{1/2}$=2.58 h 7.3×10^3 Bq/g (10)

Also, above the limit are: 55-Fe, 59-Fe and 51-Cr

"Commercially pure" Iron alloy: C = 6.8×10^5 ~16 y

Most relevant: 54-Mn$T_{1/2}$=312.2 d 6.0×10^4 Bq/g (0.1)
56-Mn $T_{1/2}$=2.58 h 7.6×10^5 Bq/g (10)

Also, above the limit are: 55-Fe, 59-Fe, 51-Cr and 31-S

^{9}Be+p (30 MeV, 1 mA)

1 year of operation

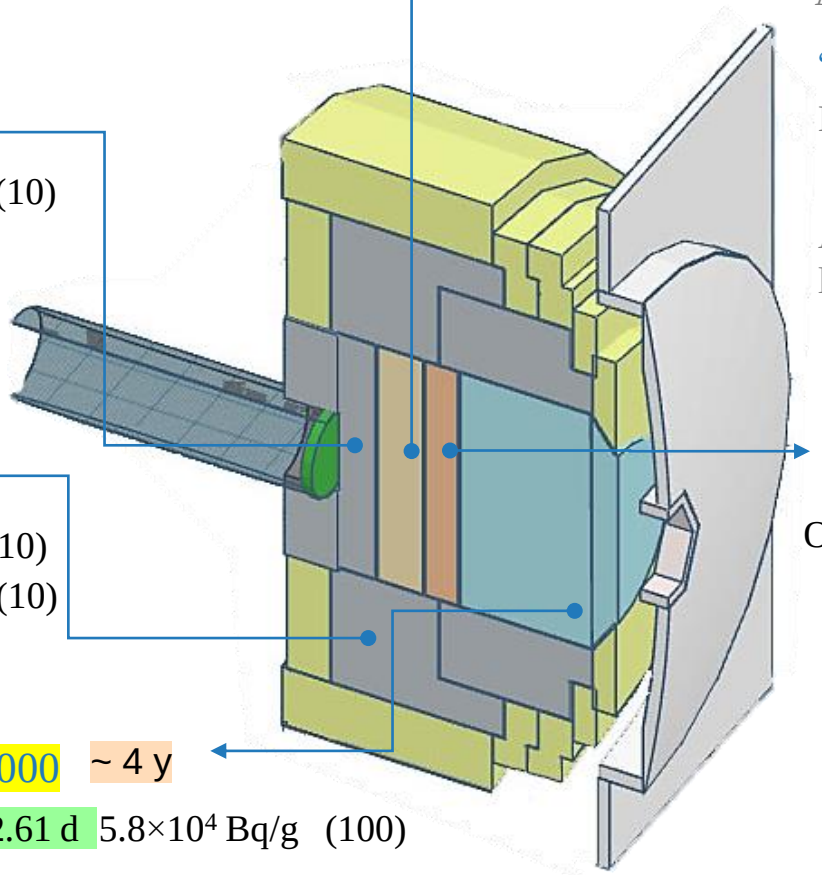

Pure Iron Filter: C = 9.2×10^{5} ~ 17 y

Most relevant: 54-Mn $T_{1/2}$=312.2 d 8.3×10^{4} Bq/g (0.1)
56-Mn $T_{1/2}$=2.58 h 7.0×10^{5} Bq/g (10)

Also, above the limit are: 55-Fe, 59-Fe, 51-Cr and 3-H

"Commercially pure" Iron: C = 9.5×10^{5} ~ 17 y

Most relevant: 54-Mn $T_{1/2}$=312.2 d 7.8×10^{4} Bq/g (0.1)
56-Mn $T_{1/2}$=2.58 h 1.6×10^{6} Bq/g (10)

As Pure Iron plus: 24-Na, 31-Si, 32-P (all above the limit)

Pure Lead Filter: C = 8.8×10^{4} ~1 y

Most relevant: 203-Hg $T_{1/2}$=46.594 d 2000 Bq/g (10)
203-Pb $T_{1/2}$=51.92 h 8.6×10^{5} Bq/g (10)

Also, above the limit are: 3-H, 202-Tl and 204-Tl

Pure Al Filter: C = 7.9×10^{4} ~ 5 y

Only: 24-Na $T_{1/2}$=14.997 h 7.9×10^{4} Bq/g (1)
3-H $T_{1/2}$=12.32 y 132 Bq/g (100)

Lead Reflector: C = 1200 < 1 y

Most relevant: 203-Hg $T_{1/2}$=46.594 d 110 Bq/g (10)
203-Pb $T_{1/2}$=51.92 h 1.2×10^{4} Bq/g(10)

Also, above the limit is 204-Tl

Pure CaF_2 Moderator: C = 3000 ~ 4 y

Most relevant: 45-Ca $T_{1/2}$=162.61 d 5.8×10^{4} Bq/g (100)

Also, above the limit are: 47-Ca, 43-K, 47-K and 18-F

Summary & Conclusions

- Induced residual radioactivity in AB-BNCT facilities is significant. Short- & intermediate-lived β–γ emitters are relevant.
- Impact on long-term operation & decommissioning.
- **Clearance levels are exceeded in a relatively short life-time (1 y). Need several years to decay below the clearance levels.**
- Minor components of alloys and/or impurities are relevant (Cu, Mn and Zn in Al, Fe and steels. The same + Fe and Sb, in Pb alloys). **To consider at the design stage.**
- **ALARA: Generation of radioactivity should be As Low As Reasonably Achievable.**

	^{7}Li+p 2.3 MeV 30 mA	^{9}Be+p 8 MeV 10 mA	^{9}Be+p 30 MeV 1 mA	^{9}Be+d 1.45 MeV 30 mA	^{13}C +d 1.45 MeV 30 mA
Target	5.7 TBq/y (^{7}Be)	Only prompt radiation	1.2 TBq/y (^{7}Be) 51 GBq/y (tritium)	54 GBq/y (tritium)	9.3 GBq/y (tritium) 28 MBq/y(^{14}C)
BSA Main RN & (time before clearance)	Fluental Moderator: 3-H (90 y)	Iron Filter: 54-Mn (16 y)	Iron Filter: 54-Mn (17 y) Pure Al Filter: 3-H (4 y) Pb Filter: 203-Hg (1 y)		

- Impact on rutinary operation (not treated in detail here):
- Short-lived radionuclides (not considered here) may become relevant..
- Dose to workers. Tasks involving handling of activated components (maintenance, replacements, etc.)

Thank you for your attention!

Acknowledgements: IAEA for this excellent meeting!