DESIGNED FOR SAFETY: 380-B TYPE B(U) PACKAGING FOR DISUSED RADIOACTIVE SOURCE RECOVERY. EXTENDED SYNOPSIS.

M.D. WALD-HOPKINS
Los Alamos National Laboratory
Los Alamos, NM, USA
Email: mwaldhop@lanl.gov

F.G. COCINA
Los Alamos National Laboratory
Los Alamos, NM, USA
Email: fcocina@lanl.gov

R.J. COEL-ROBACK
Los Alamos National Laboratory
Los Alamos, NM, USA
Email: becky_cr@lanl.gov

C.W. Weyerman
Los Alamos National Laboratory
Los Alamos, NM, USA
Email: weyerman@lanl.gov

T.J. BAUER
Los Alamos National Laboratory
Los Alamos, NM, USA
Email: tjbauer@lanl.gov

T.L. TAPLIN
National Nuclear Security Administration
Washington, DC, USA
Email: temeka.taplin@nnsa.doe.gov

P. NOSS
Orano Federal Services, LLC
Federal Way, WA, USA
Email: phil.noss@orano.group

Abstract

Without proper end-of-life management, disused sealed radioactive sources (DSRSs) become increasingly vulnerable to loss, theft, and sabotage that can result in accidents and incidents, including loss of life. Type B quantities of radioactive material can be particularly hard to manage due to complexity and costs associated with their compliant shipment from user's facilities to sites for final disposition or secure long-term storage. Historically, a major part of this issue stems from the lack of certified Type B packaging for safe, secure, and legally compliant shipments.

To help address this issue and enhance safety and security of high-activity DSRS transport, in 2009 the U.S. Department of Energy (DOE), National Nuclear Security Administration (NNSA) Office of Radiological Security (ORS) directed Los Alamos National Laboratory (LANL) to design, test, certify, and fabricate Type B packaging for domestic and international use. Through these efforts, the NNSA Model 380-B Type B (USA/9370/B(U)-96) packaging was developed. The U.S. Nuclear Regulatory Commission (NRC) certified the 380-B in 2017, and since then, one unit has been fabricated and brought into operation.

The 380-B is a heavy (25,000 kg empty), lead shielded container designed primarily for domestic (US) transportation of Type B quantities of Cs-137 and Co-60 sealed sources in devices used for medical, industrial, and research purposes. Maximum activities of Cs-137 and Co-60 payloads are 285 TBq and 1505 TBq respectively. The 380-B is mounted on a dedicated trailer, outfitted with custom designed safety and operational features. The dedicated trailer has work platforms with railings to allow operation of the container without ladders. The trailer also has onboard stands for the cask's lid and upper impact limiter. These stands increase the safety of surveys and inspections of these items, eliminating the need to work under or near a suspended load. After confirmation that the payload has been loaded in accordance with requirements, it is transported to a secure storage facility in the US until arrangements can be made for final disposition of the sources. This last step represents permanent risk reduction.

Over a decade after first being conceptualized, the 380-B was put into service on May 1, 2021. This was a major achievement for ORS/LANL after putting years of effort into design, certification, and fabrication of the 380-B, and subsequent development of operational infrastructure and processes. The source recovery, which occurred at a hospital in Albuquerque, New Mexico, USA, was that of a blood irradiator containing ~62 TBq of Cs-137 sealed sources. LANL subcontracted a licensed and experienced vendor to prepare the device for shipment, after which LANL personnel loaded the irradiator shield into the 380-B cavity and closed it in accordance with approved procedures. Loading and closure of the 380-B in Albuquerque went smoothly and as anticipated. After approximately seven hours on site, the field crew completed loading of the 380-B and it departed in-route to the interim storage facility.

1.INTRODUCTION

The OSRP is sponsored by the NNSA's Office of Radiological Security to recover excess, unwanted, and abandoned sealed radioactive sources that pose a potential risk to national security, and public health and safety. When introduced in 1997, the original mission of the program was to recover and dispose of Pu-239 sources. After the terrorist events on September 11th, 2001, the mission was expanded to address other isotopes that could be used for nefarious purposes, including high activity beta/gamma emitting isotopes such as Cs-137 and Co-60. These isotopes are commonly used for medical and industrial purposes, and can be found in virtually all developed areas across the globe. Since 2004, the OSRP has recovered and disposed of well over a million curies of Cs-137 and Co-60 sources, the result of up to 90 device recoveries annually. Each recovery is unique and requires a highly experienced and trained source recovery experts, device packagers, and Type B package operators. Figure 1. shows some of the devices containing Category 1 and 2 quantities of Cs-137 and Co-60 sources, commonly recovered by the OSRP.

In 2004, the U.S. Nuclear Regulatory Commission (NRC) revised their regulations in 10 Code of Federal Regulations (CFR) Part 71 to harmonize with the IAEA's 1996 edition of "Regulations for the Safe Transport of Radioactive Material" (IAEA Safety Standards Series No. TS-R-1). In doing so, a number of Type B packagings used by the OSRP and industry for Type B shipments were phased out of use on October 1st, 2008. In anticipation of this change and subsequent lack of certified Type B packagings for compliant shipments, the NNSA's Office of Radiological Security directed the OSRP to design, test, certify, and fabricate new Type B container models. This decade long effort has involved close collaboration between Federal entities, industry experts, the IAEA, and a multitude of other stakeholders. To date, two new Type B packaging models, the 435-B and 380-B, have been licensed and fabricated, and both are in in operational use.

Figure 1 Common irradiation devices recovered by the OSRP

2. 380-B PACKAGING

2.1. 380-B Description

One of the new Type B packagings developed by the NNSA is the 380-B (USA/9370/B(U)-96). The packaging consists of a lead-shielded cask body, lead-shielded closure lid, and upper and lower impact limiters. Shielded devices are placed in the cask body for shipment. The package uses conventional materials and metalworking techniques. When loaded and prepared for transport, the 380-B package is 118.2 inches tall, 100 inches in diameter (over the upper and lower impact limiters), and weighs a maximum of 67,000 lb. The package is designed to be transported singly, with its longitudinal axis vertical, by ground, air, or by water in exclusive use. As shown in Figures 2 and 3, the 380-B package consists of a lead-shielded cask body, a lead-shielded closure lid, closure bolts, and upper and lower impact limiters containing polyurethane foam. The package is primarily of welded construction, using Type 304 austenitic stainless steel.

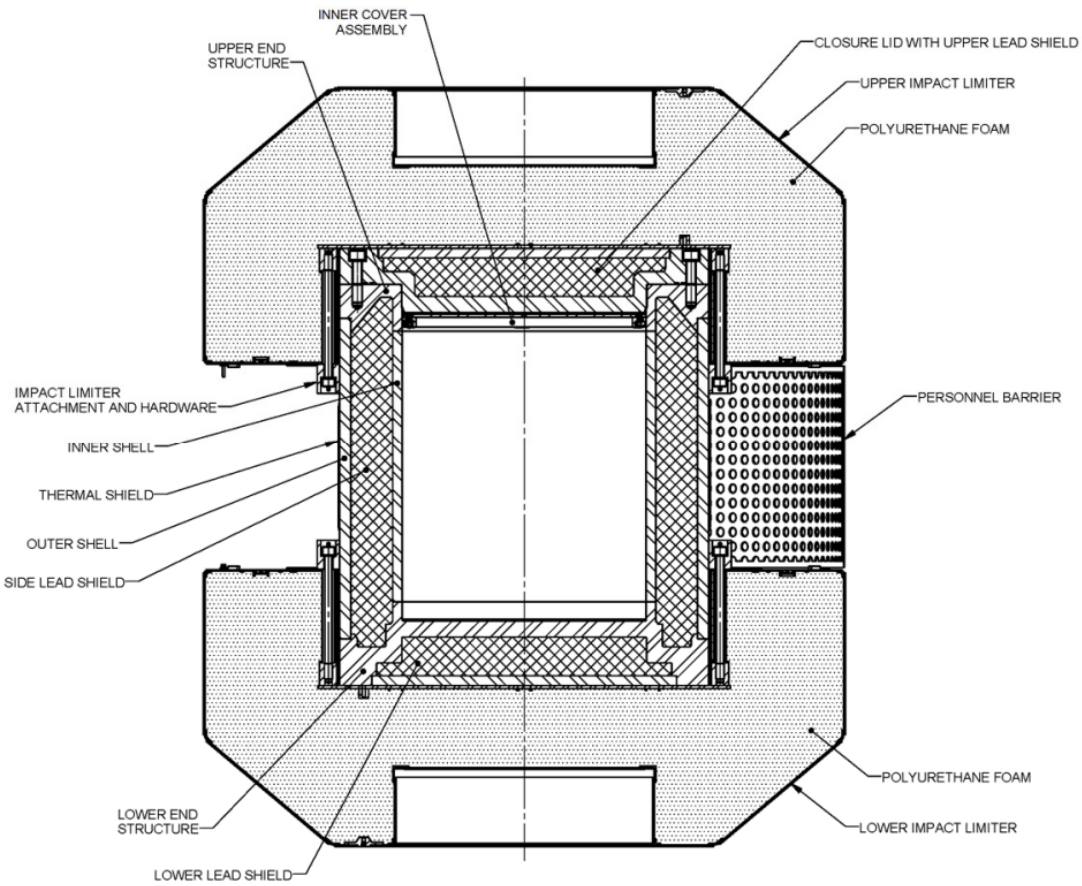

Figure 2 General features of the 380-B

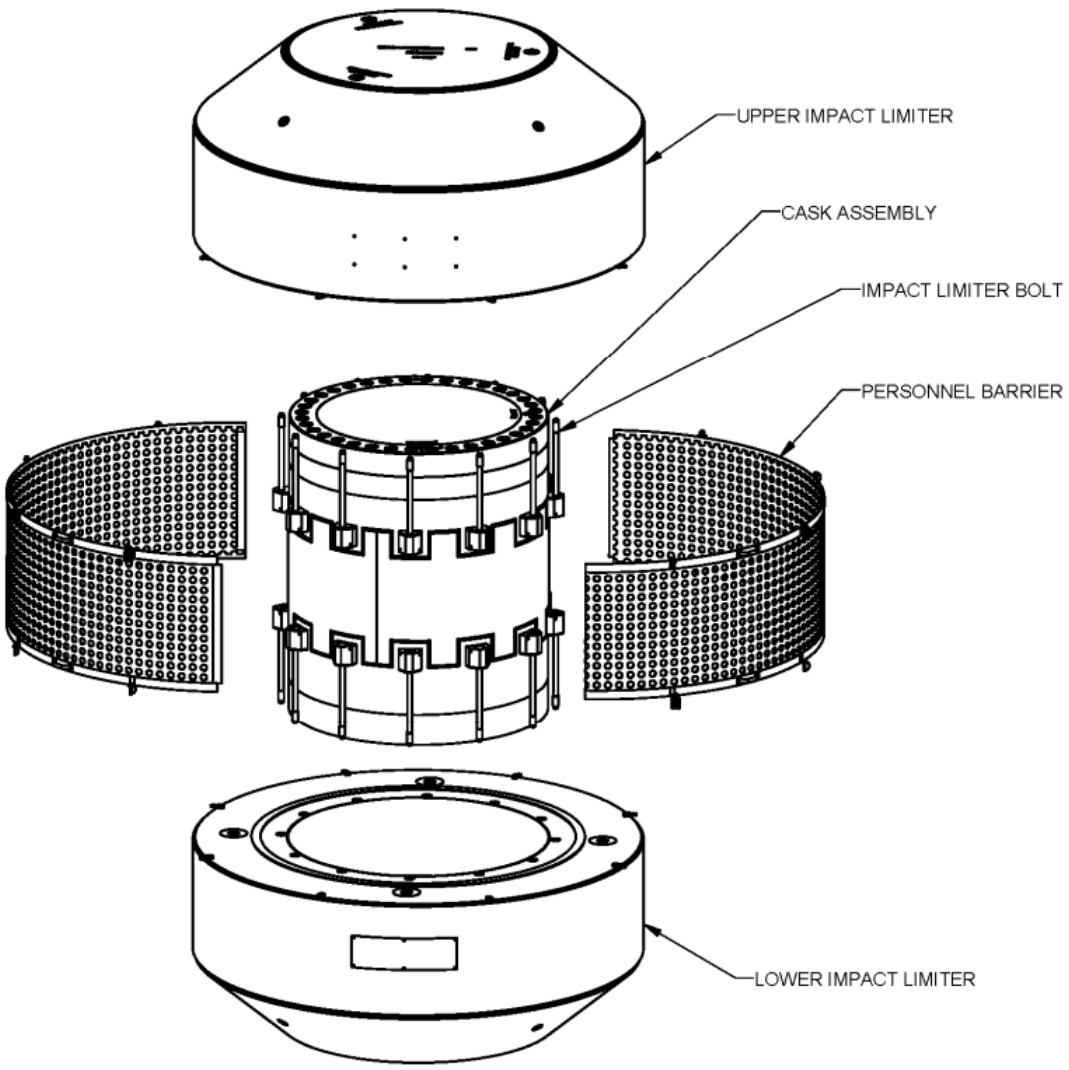

Figure 3 Exploded View of the 380-B

2.2. 380-B Payloads

The 380-B package transports shielded devices containing radioactive sources. All sources are sealed and encapsulated. The maximum decay heat in the package is 205W. Shielded devices are units that were designed and manufactured to provide a safe source of radiation for industrial, medical, or research purposes. The details of the device designs may not be known, and the structural performance of the devices in an accident may not be known, therefore no shielding credit is taken for the devices during transportation. The maximum total device weight is 10,000 lb and the maximum weight for all dunnage is 2,000 lb. Maximum activities for allowable isotopes are shown in Table 1.

Table 1 Maximum activities in 380-B

Nuclide	Maximum Activity
Co-60	285 TBq
Cs-137	1505 TBq
Sr-90	1132 TBq
Ra-226	41 TBq
Ra-226Be	0.2 TBq
Ir-192	1233 TBq

2.3. Custom Operational and Safety Features

Describe custom designed and fabrication auxiliary equipment, including:

- Work platform
- Lid stand
- Impact limiter stand
- Dunnage assembly

2.4. Training and Worker Qualification Activities

Training and worker qualification activities in Carlsbad NM, March 2021.

2.5. First Use of the 380-B

First use of the cask at site in ABQ, May 2021.

3.SUMMARY

ACKNOWLEDGEMENTS