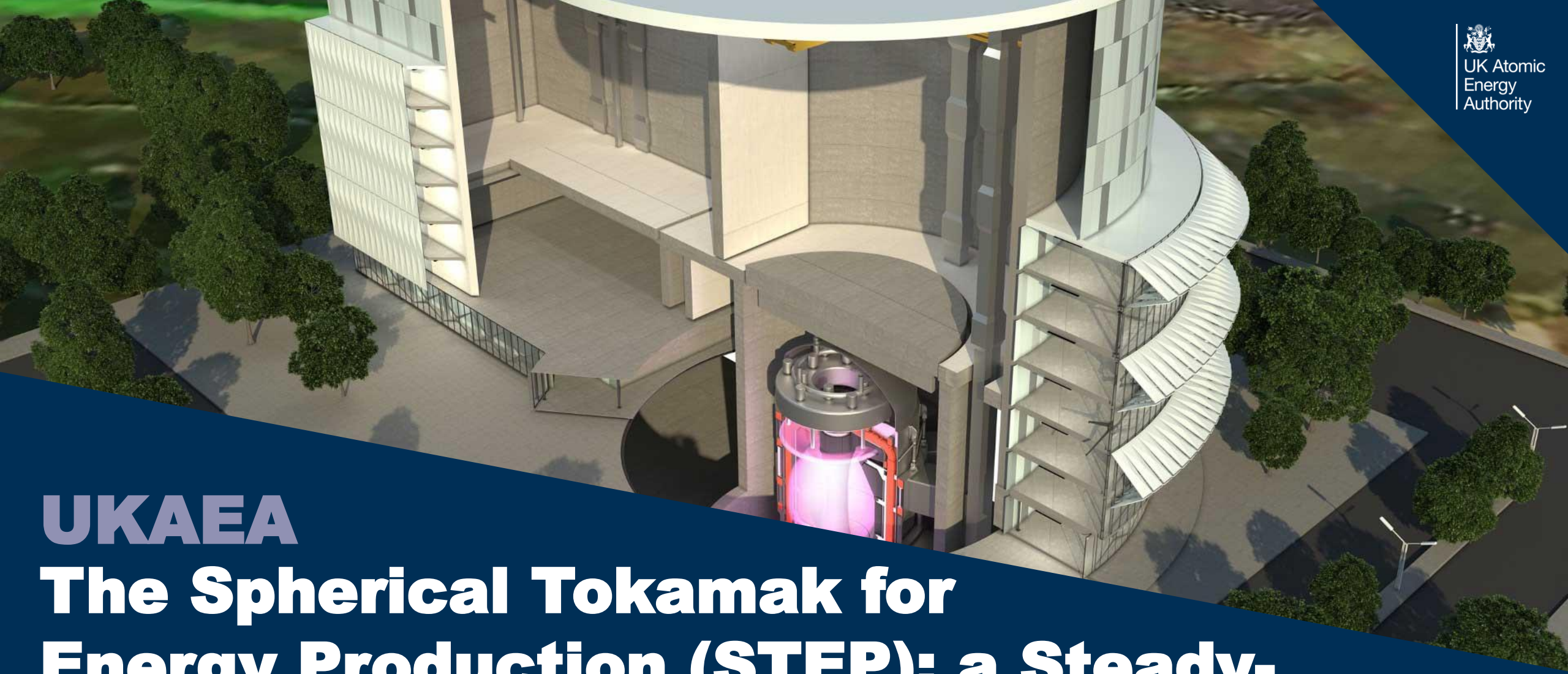

UK Atomic Energy Authority

UKAEA

The Spherical Tokamak for Energy Production (STEP): a Steady-State Fusion Reactor

Ken McClements for the STEP Plasma, Control and Heating & Current Drive Team

IAEA Technical Meeting on Long-Pulse Operation of Fusion Devices, Nov 15 2022

Thanks to the STEP Plasma team & Collaborators …

UK Atomic Energy Authority

Adam Parrot
Agnieszka Hudoba
Alex Prokopyszyn
Alex Fil
Alistair McShee
Andrew Hagues
Ben Chapman-Oplopoiou
Bhavin Patel
Cameron Olde
Clive Challis
Colin Roach
Dan Kennedy
Daniele Brunetti
David Keeling
David Moulton
Diagnostic support
Elina Militello Asp
Elisee Trier
Emmi Tholerus
Florian Koechl
Francesco Palermo
Francis Casson
Frida Eriksson
Gerard Corrigan
Guoliang Xia
Hana El-Haroun
Hendrik Meyer*
Hyun-Tae Kim
Ivan Konoplev
James Harrison
James Oliver
Josh Mitchell
Krassimir Kirov
Lingyan Xiang
Mark Henderson
Mark Nightingale
Mengdi Kong
Michael Fitzgerald
Morten Lennholm
Neil Conway
Oliver Bardsley
Omkar Myatra
Peter Fox
Ridhima Sharma
Romain Futtersack
Ryoko Osawa
Sam Bakes
Samuel Tippetts
Samuli Saarelma
Sarah Newton
Shane Scully
Simon Freethy
Spyridon Aleiferis
Stephen Marsden
Stuart Henderson
Thomas Wilson
Tim Hender
Žiga Štancar

University of York

H. Wilson
D. Dickinson
R. Vann
B. Dudson
B. Lipschultz
C. Ridgers
M. Anastopoulos
L. Holland
M. Giacomin

General Atomics

D. Humphreys
A. Himak
J. Barr
A. Pajares
M. Walker
A. Welander
X. Zichuan
Y. Liu
J. Candy
E. Belli

University of Strathclyde Glasgow

B. Eliasson
A. Cross
K. Ronald
D. Speirs
M. Higgens

Create

R. Albanese
R. Ambrosino
A. Castaldo
M. Mattai

Universität Stuttgart

A. Köhn-Seeman

ISTP Consiglio Nazionale delle Ricerche

L. Figini

Project Support
H. Walden, F. Thompson, L. Warwick, J. Jones

Scientific Advice
W. Morris, A. Kirk, M. Cox, G. Fishpool, T. Todd

System Engineering
J. Pope, P. Curson

* STEP Plasma Lead

Site for STEP prototype fusion energy plant selected

UK Atomic Energy Authority

- STEP prototype power plant (SPP) will be built at West Burton UK, ~200km from Culham Science Centre
- Target completion date: 2040
- Key goals:
  - Fusion power generation on GW scale
  - Net electric power
  - Tritium self-sufficiency

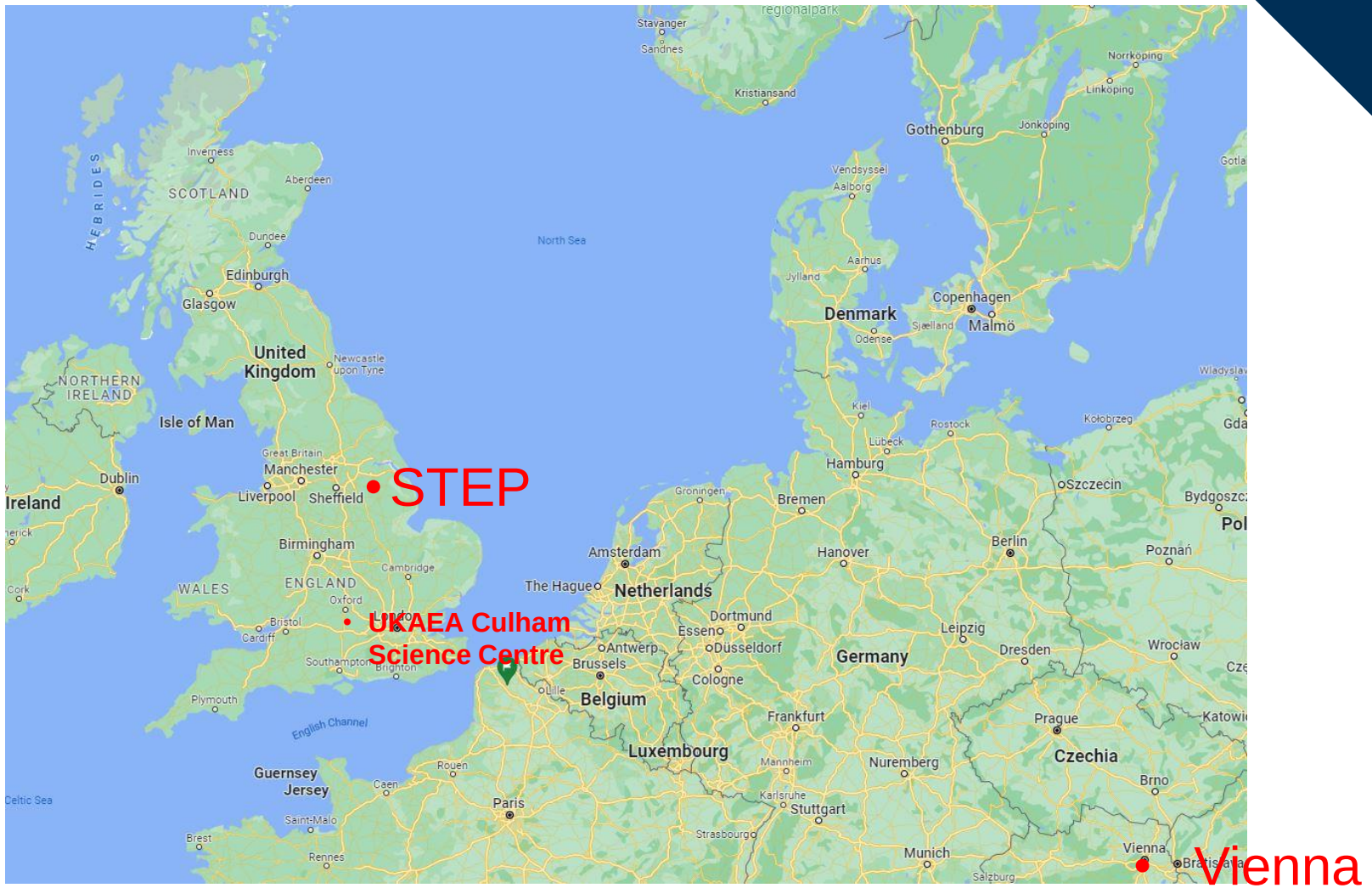

Outline

- Role of STEP in path to power plant
- Advantages/challenges of spherical tokamak approach
- Plasma modelling workflow
- Flat-top operating points
- Divertor design
- Stability control
- EC & EBW current drive
- Core confinement
- α-particle confinement
- Plasma start-up

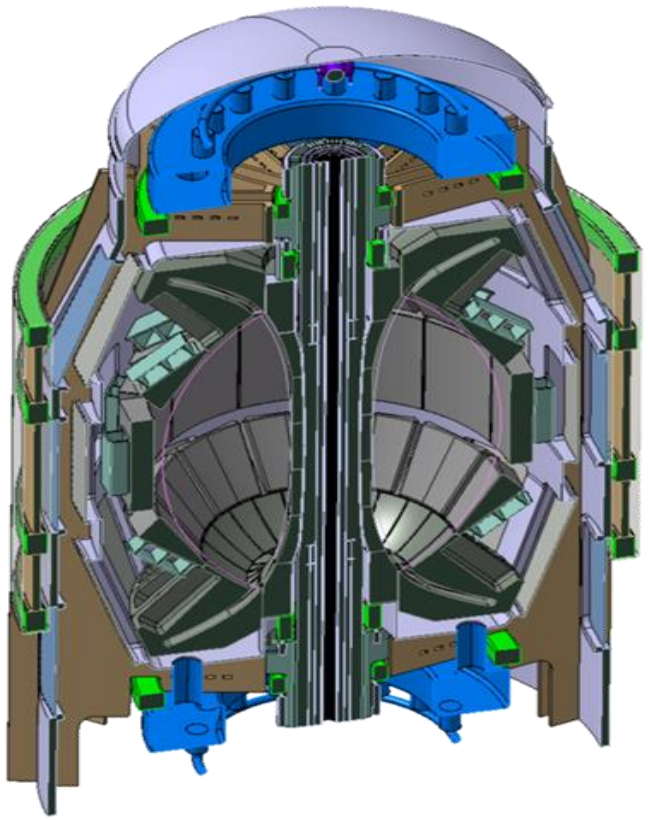

Outline

- Role of STEP in path to power plant
- Advantages/challenges of spherical tokamak approach
- Plasma modelling workflow
- Flat-top operating points
- Divertor design
- Stability control
- EC & EBW current drive
- Core confinement
- α-particle confinement
- Plasma start-up

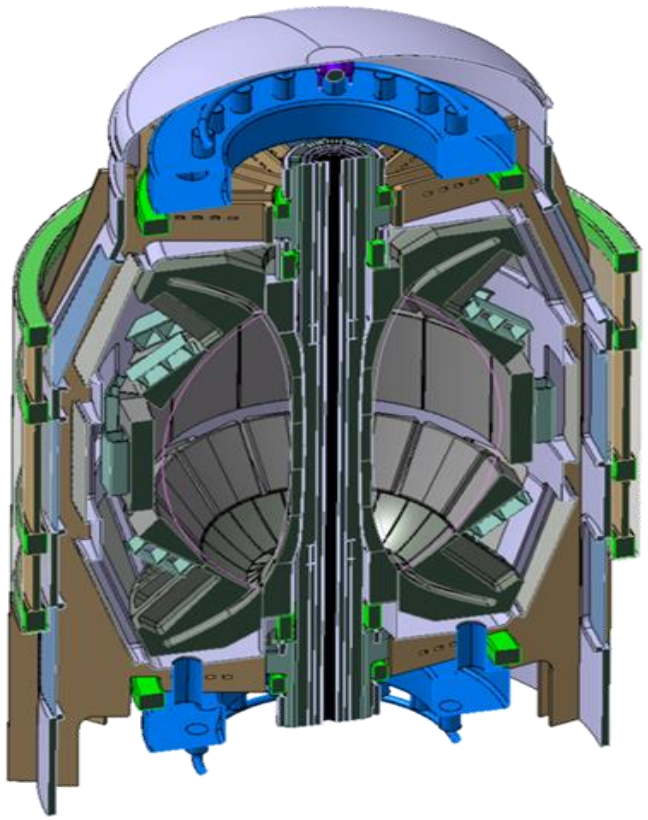

Role of STEP in path to power plant

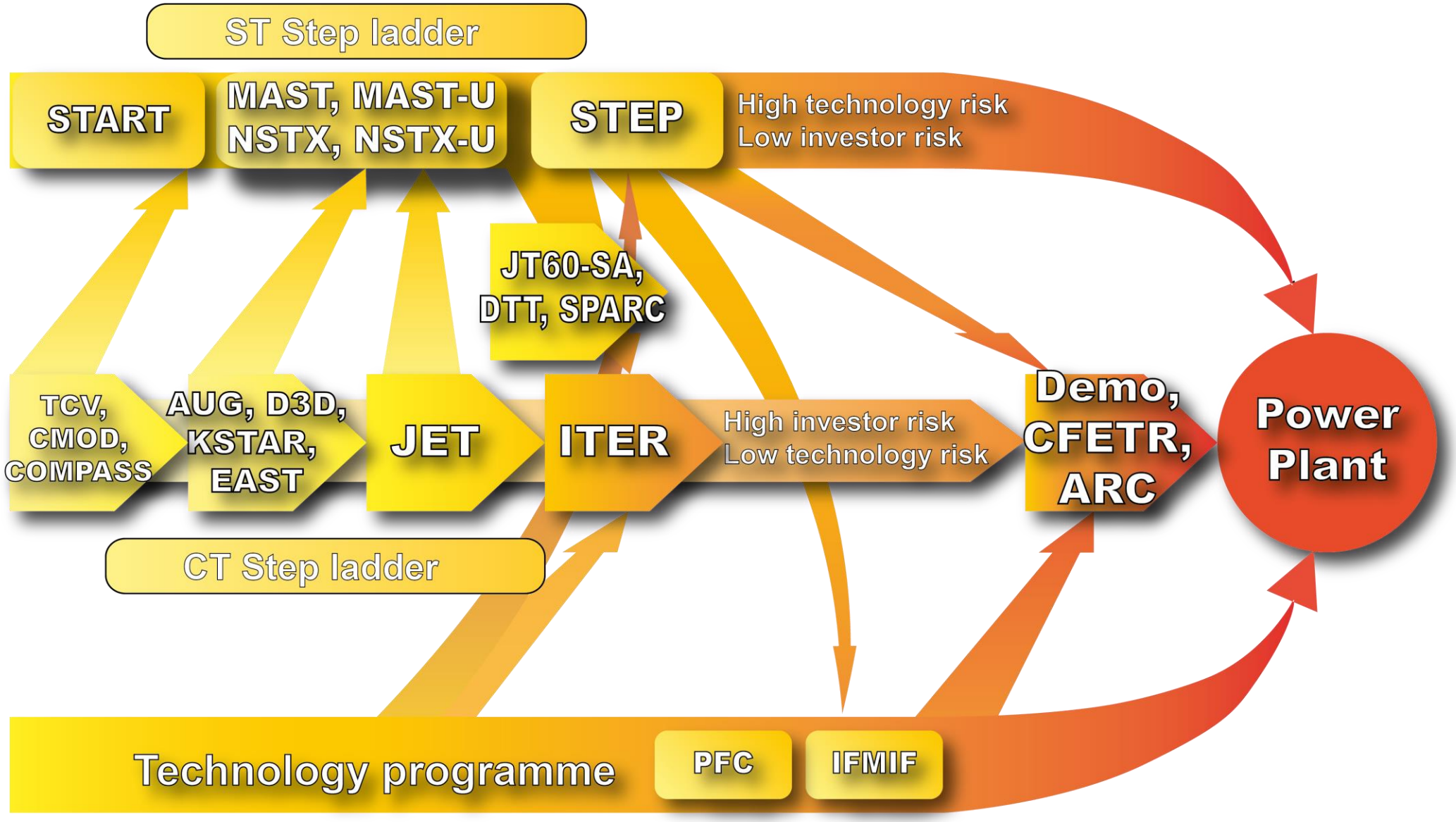

Role of STEP in path to power plant

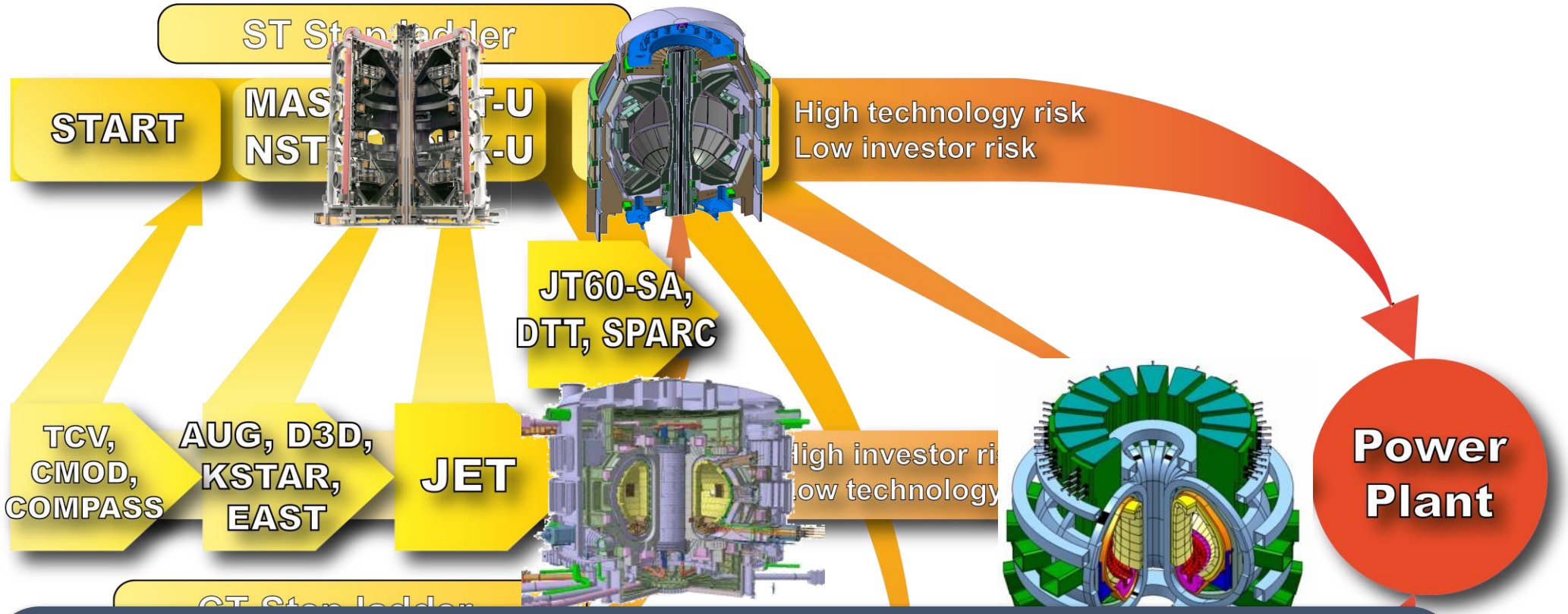

Deliver UK prototype fusion energy plant targeting 2040 & path to commercial viability of fusion

- T1: Concept 2019 - 2024
- Tranche 2: Design 2024 - 2032
- Tranche 3: Build 2032 - 2040

Outline

- Role of STEP in path to power plant
- Advantages/challenges of spherical tokamak approach
- Plasma modelling workflow
- Flat-top operating points
- Divertor design
- Stability control
- EC & EBW current drive
- Core confinement
- α-particle confinement
- Plasma start-up

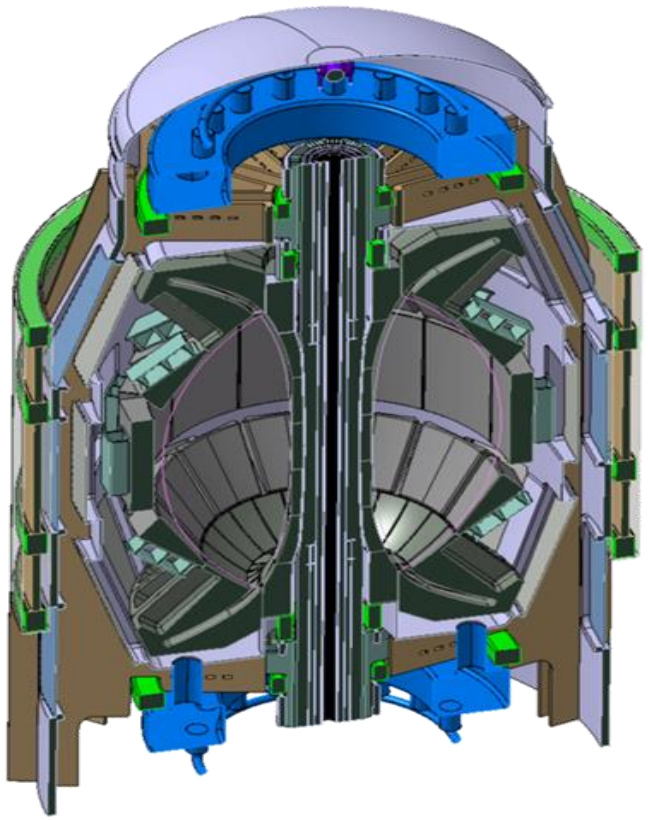

ST approach provides possible route to high P_{fus}

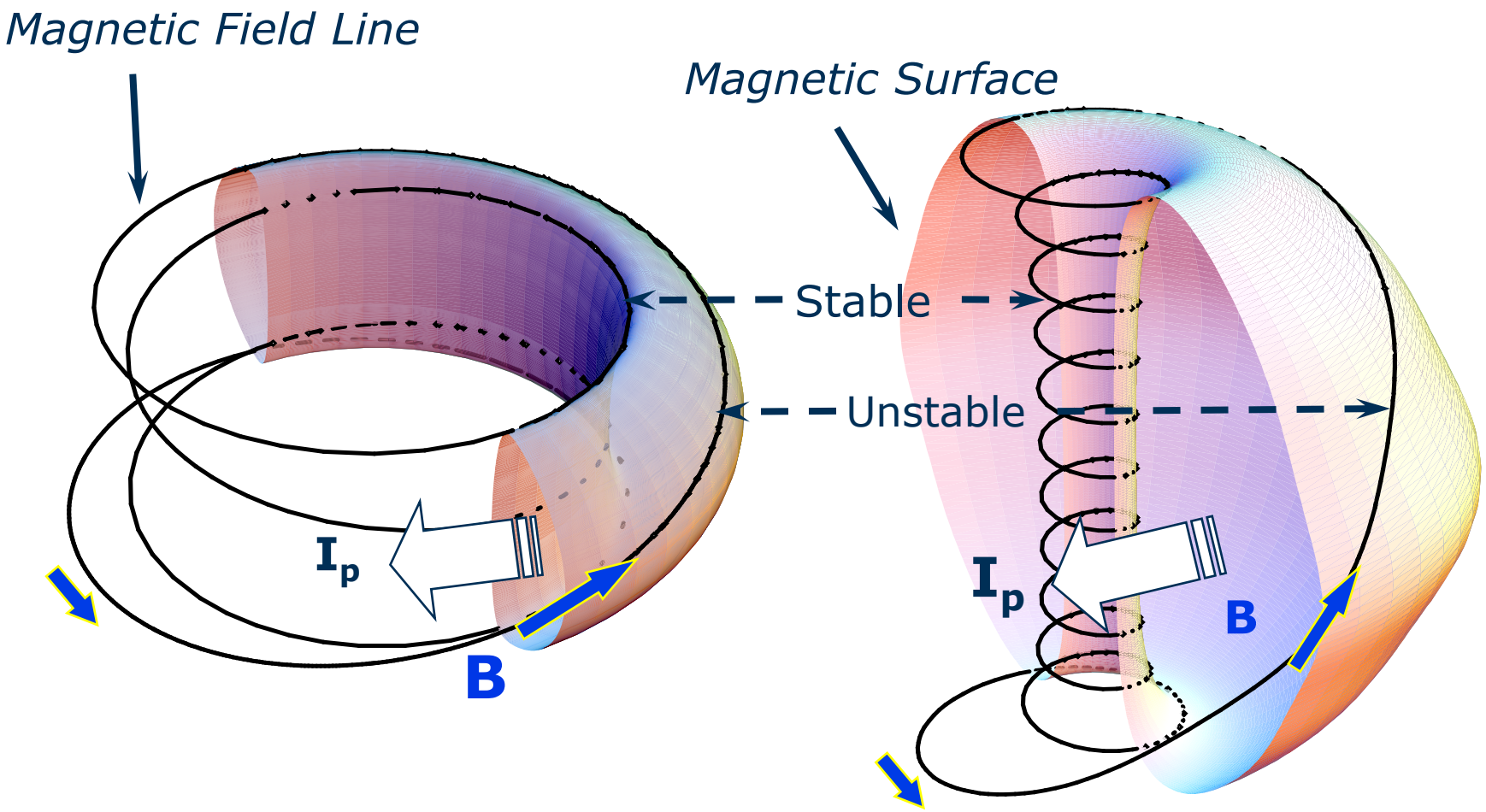

Conventional Tokamak *Spherical Tokamak*

cartoon courtesy of Y.M. Peng

- STs allow higher plasma pressure in lower toroidal field ⇒ higher β
- STs operate naturally at higher triangularity δ (⇒ improved pedestal) & elongation κ

$$P_{fus} \propto n^2 \langle \sigma v \rangle_{DT} \propto p^2 \propto \beta_T^2 B_T^4$$

with $\beta_T \sim \sqrt{\epsilon}(1+\kappa^2)\beta_N^2/f_{BS}$

J.E. Menard et al. NF **37** (1997) 595

$\beta_N = \frac{\beta}{I_p/aB_T}$

$f_{BS} = I_{BS}/I_p$ (I_{BS}: bootstrap current)

ST approach provides possible route to high P_{fus}

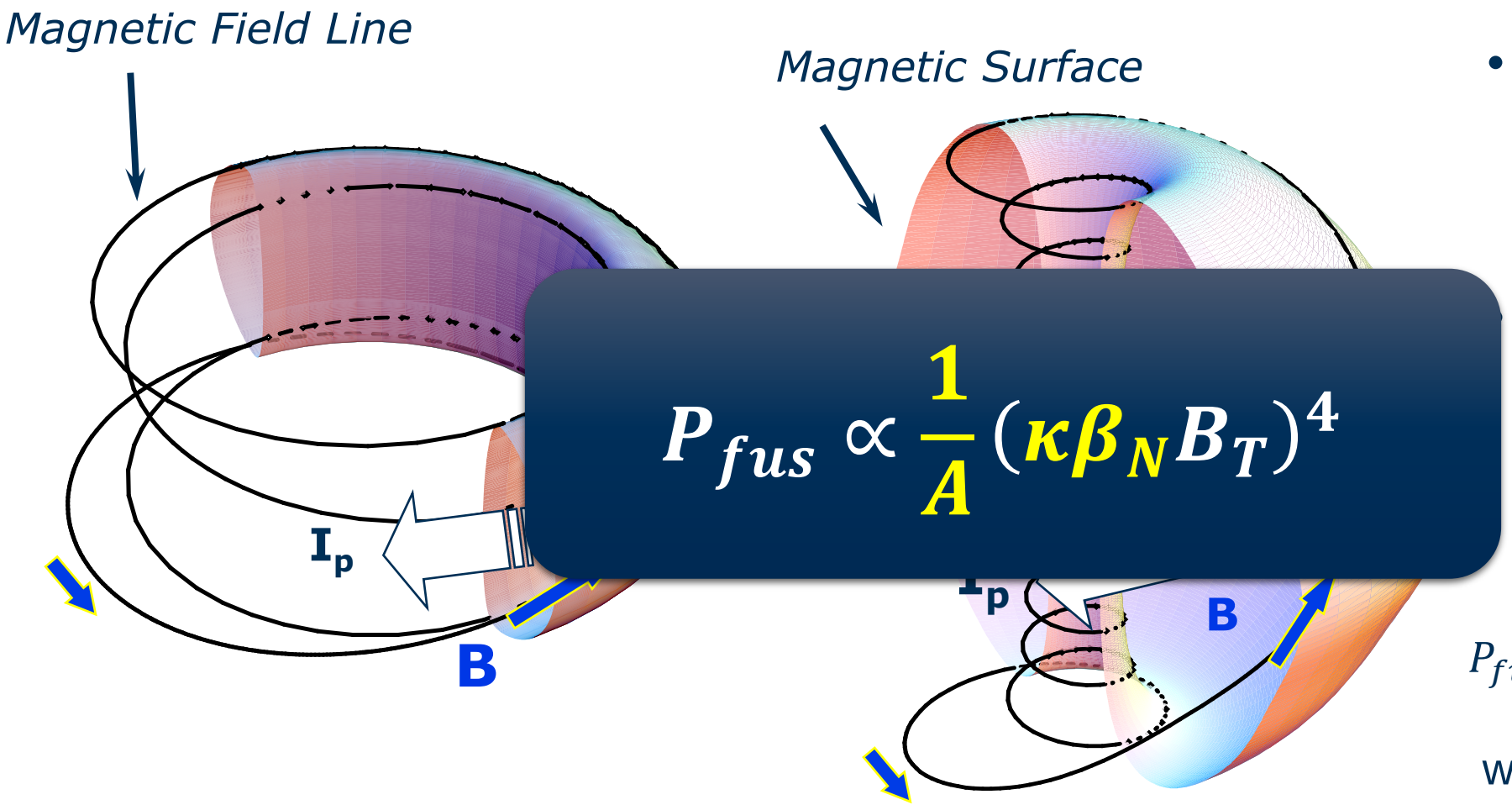

$$P_{fus} \propto \frac{1}{A}(\kappa\beta_N B_T)^4$$

Conventional Tokamak

Spherical Tokamak

cartoon courtesy of Y.M. Peng

- STs allow higher plasma pressure in lower toroidal field ⇒ higher β

  STs operate naturally at higher triangularity δ (⇒ improved pedestal) & elongation κ

$$P_{fus} \propto n^2\langle\sigma v\rangle_{DT} \propto p^2 \propto \beta_T^2 B_T^4$$

with $\beta_T \sim \sqrt{\epsilon}(1+\kappa^2)\beta_N^2/f_{BS}$

J.E. Menard et al. NF **37** (1997) 595

$\beta_N = \frac{\beta}{I_p/aB_T}$

$f_{BS} = I_{BS}/I_p$ (I_{BS}: bootstrap current)

ST-specific challenges for plasma

UK Atomic Energy Authority

- Compact design ⇒
  - less surface for tritium breeding
  - less surface for handling heat & particle fluxes ⇒ **need alternative divertor designs**
  - less space for toroidal field (TF) coils ⇒ **limits TF even if coils are superconducting**
  - less space for solenoid ⇒ **design for largely/wholly non-inductive pulses**
    - flat-top phase probably needs to be 100% non-inductive & much longer than ramp-up + ramp-down to ensure acceptable duty-cycle in power plant ⇒ **need to plan for long-pulse operation**

- Bootstrap current must be optimised to reduce need for auxiliary current drive ⇒ **operation at high normalised pressure β_N & elongation κ**
  - Operation at high β_N ⇒
    - need to ensure elevated $q_{min} > 2$ ⇒ **efficient off-axis current drive**
    - need to actively control resistive wall modes (RWMs)
  - Operation at high κ ⇒
    - need plasmas with low internal inductance l_i ⇒ **efficient off-axis current drive**

Outline

- Role of STEP in path to power plant
- Advantages/challenges of spherical tokamak approach
- Plasma modelling workflow
- Flat-top operating points
- Divertor design
- Stability control
- EC & EBW current drive
- Core confinement
- α-particle confinement
- Plasma start-up

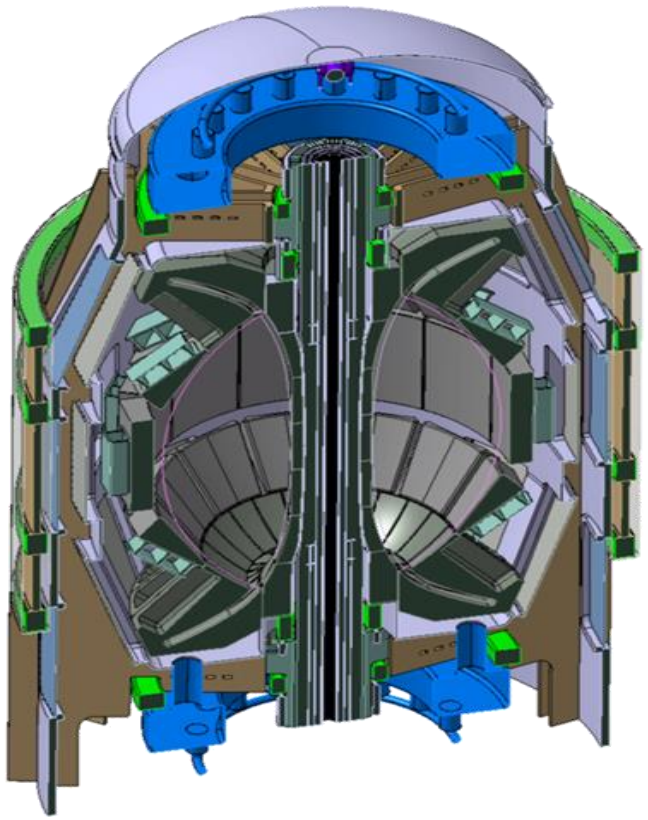

Integrated Modelling at centre of modelling workflow

UK Atomic Energy Authority

New models required

Fast concept genera-tion to explore solution space

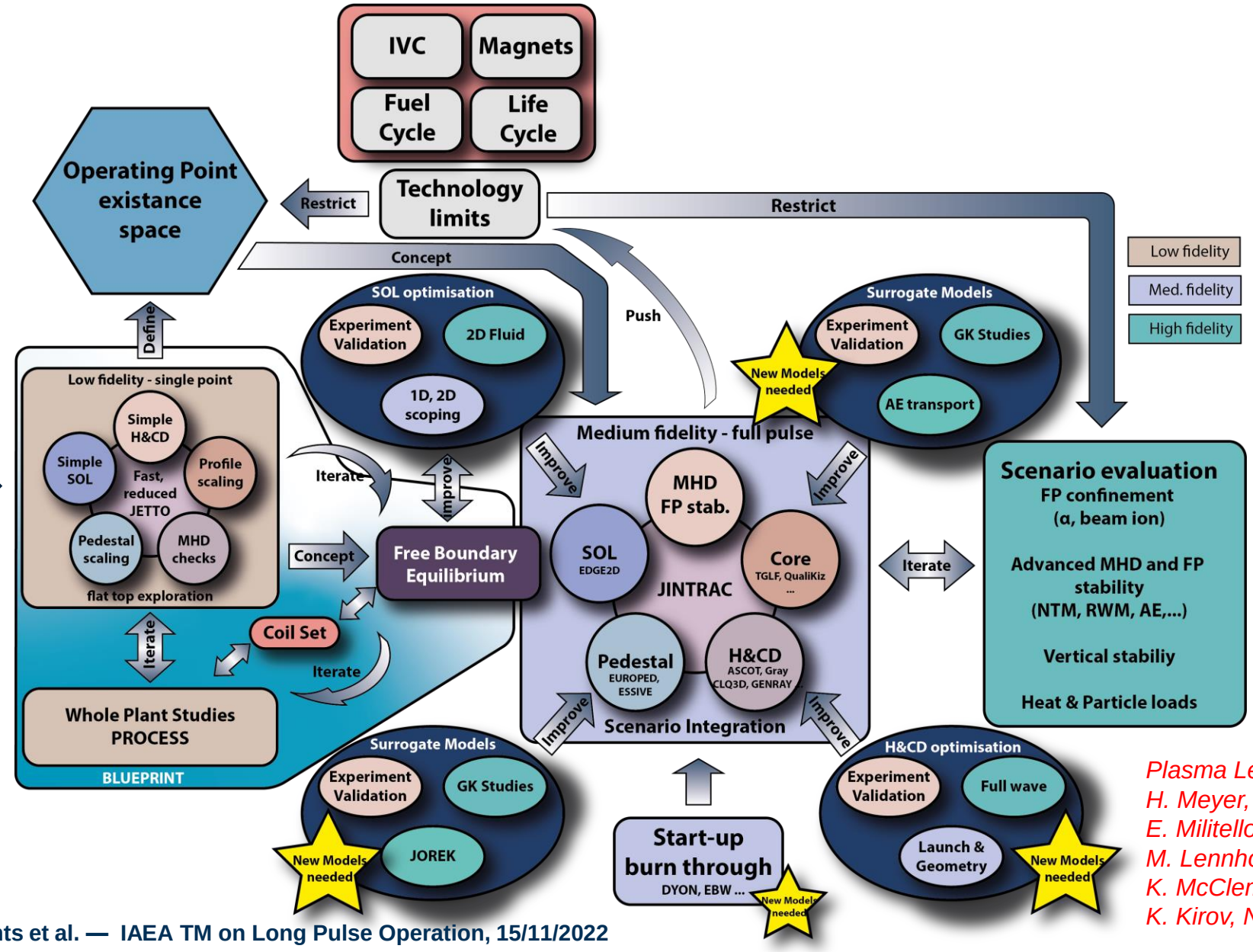

Higher fidelity analysis to gain confidence

Plasma Lead Team:
H. Meyer, C. Roach, S. Saarelma, F. Casson, E. Militello-Asp, T. Hender, A. Fil, M. Lennholm S. Henderson, J. Harrison, K. McClements, M. Henderson, S. Freethy, K. Kirov, N. Conway

1D transport code (JETTO) used as assumption integrator

- STEP parameter regime outside validity of reduced transport models developed for present-day conventional tokamaks which don't capture electromagnetic (EM) turbulence expected to prevail in STEP
  - **β_N is input**
  - Other input parameters from systems code PROCESS
- Gyro-Bohm transport model produces profiles consistent with sources & sinks
  - Coefficients adapted to reflect dominant e^- transport as observed in present-day STs & suggested by gyrokinetic calculations
- Continuous pellet source model for fuelling
- Simplified heating & current drive models calibrated with higher fidelity calculations

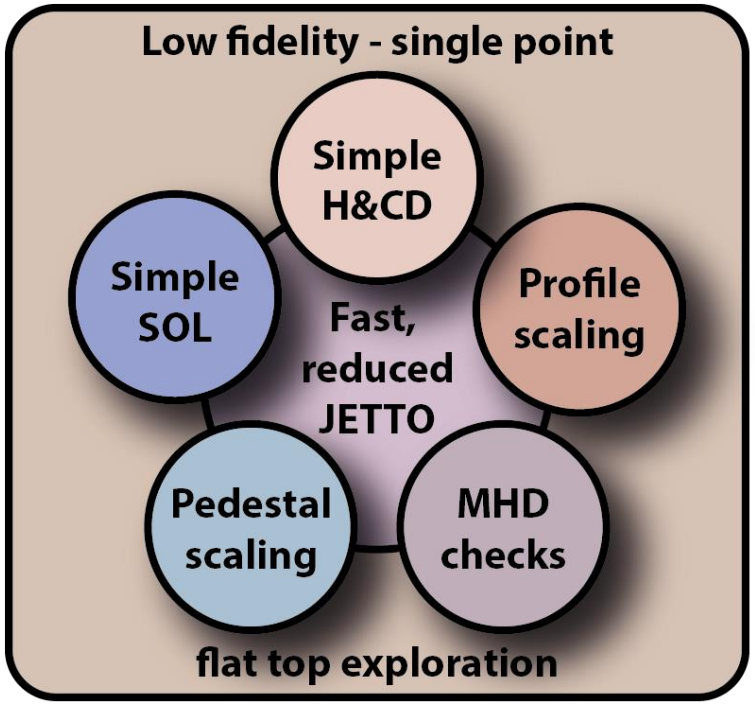

Outline

- Role of STEP in path to power plant
- Advantages/challenges of spherical tokamak approach
- Plasma modelling workflow
- Flat-top operating points
- Divertor design
- Stability control
- EC & EBW current drive
- Core confinement
- α-particle confinement
- Plasma start-up

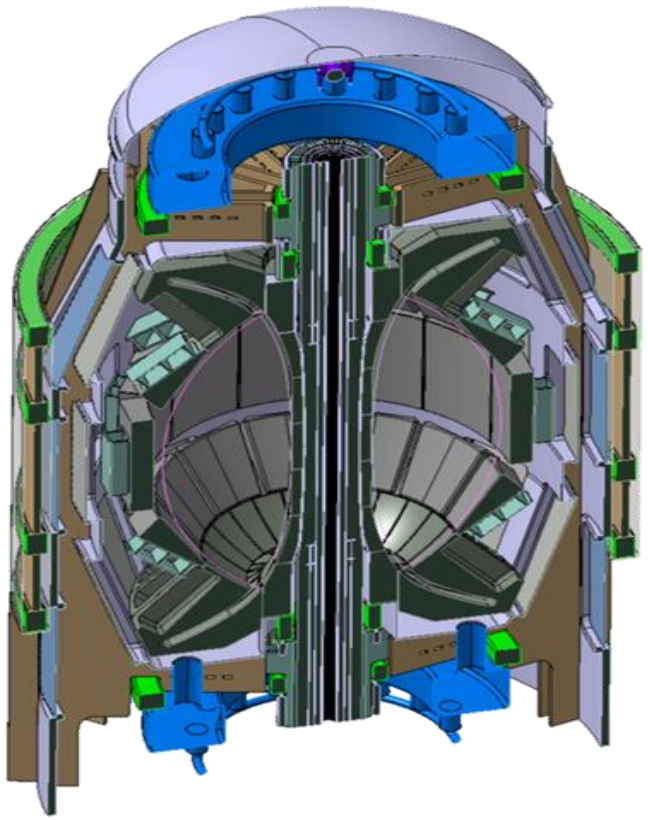

Non-inductive flat-top operating point with access to ECCD & EBW $\Rightarrow B_T = 3.2\ T$

ECCD: Electron cyclotron heating & current drive
EBW: Electron Bernstein wave heating & current drive

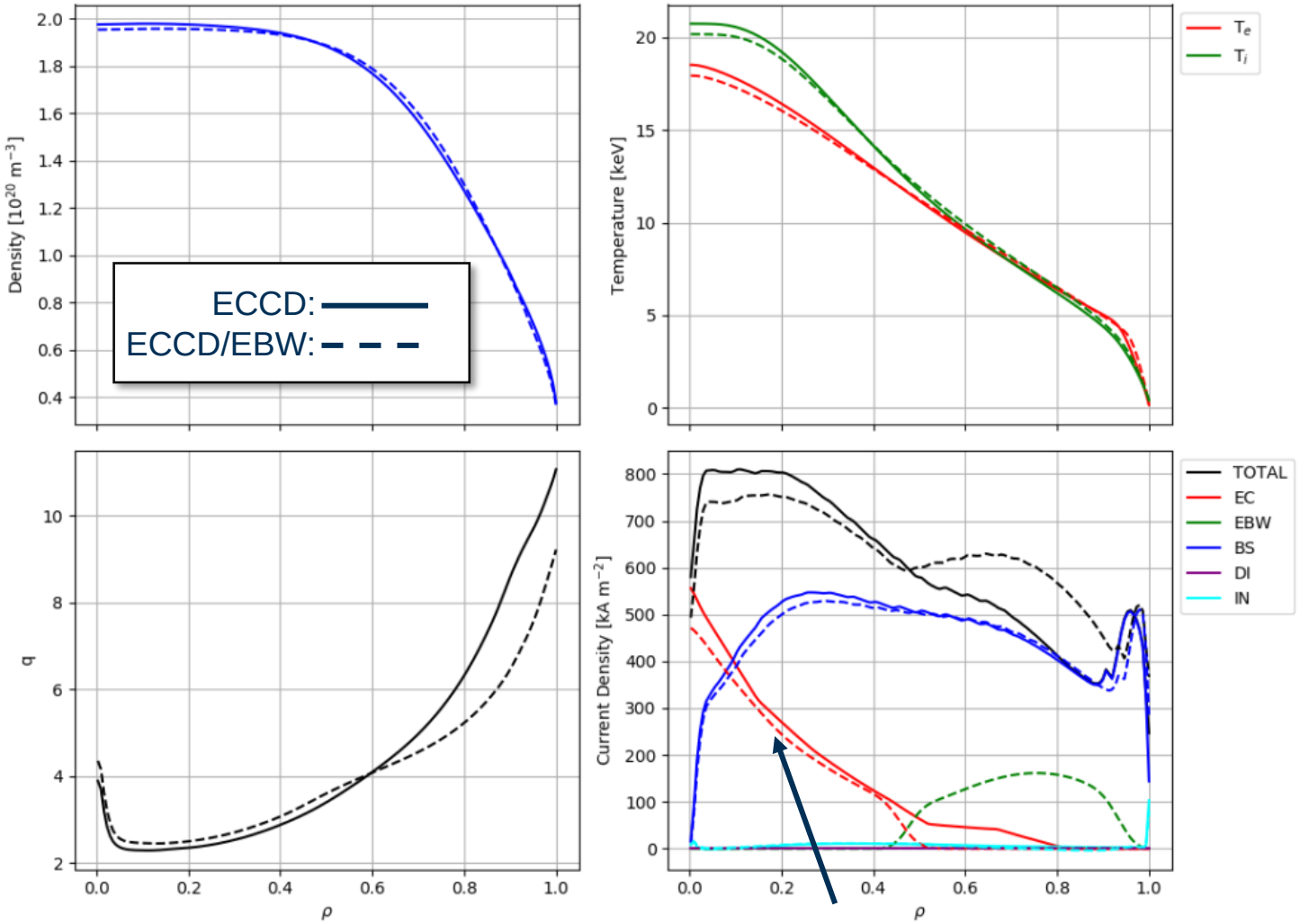

core ECCD to avoid current hole

H&CD	EC	EC/EBW
R_{geo} [m]	3.60	
A	1.8	
$B_T\ (R_{geo})$[T]	3.2	
I_p [MA]	20.9	22.0
κ	2.93	
δ	0.59	0.50
P_{fus} [GW]	1.76	1.77
P_{net}^{el} [MW]	188	182
P_{ECCD} [MW]	150	154
P_{rad} [MW]	338	341
Q	11.8	11.5
β_N	4.4	4.1
f_{BS}	0.88	0.78
$\bar{n}/n_{GW}$ [%]	100	94
$l_i\ (3)$	0.25	0.28
η_{CD}^{EC} [A/W]	0.016	0.027
η_{CD}^{EBW} [A/W]	N/A	0.034
P_{sep}/R_{geo} [MW/m]	41	
$(H_{98} + H_{98}^{\star})/2$	1.35	1.25

F. Casson, F. Koechl, S. Marsden, G. Szepesi, E. Tholerus, T. Wilson

Low density hot ion flat-top operating point with access to fundamental ECCD

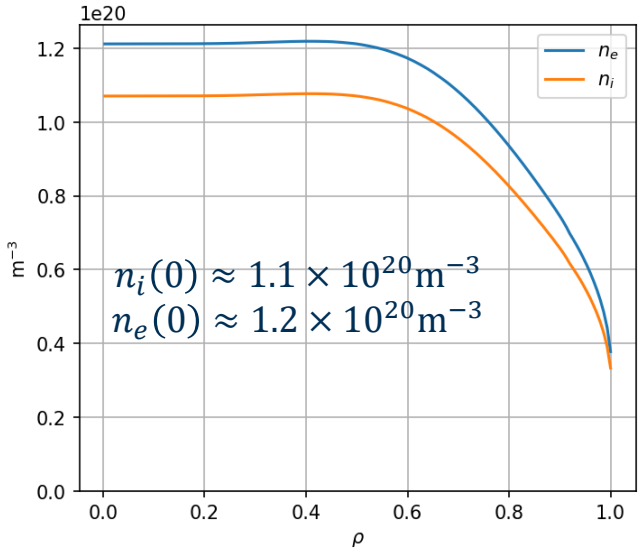

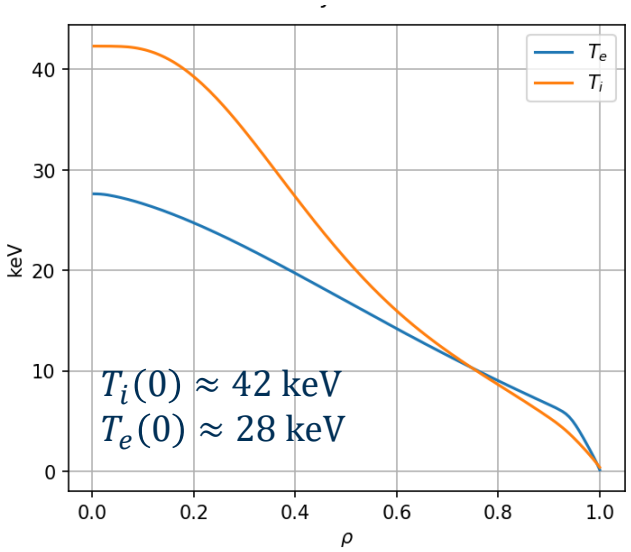

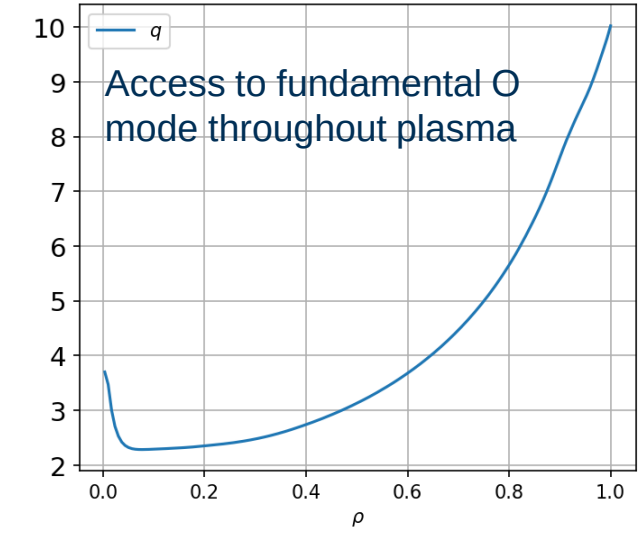

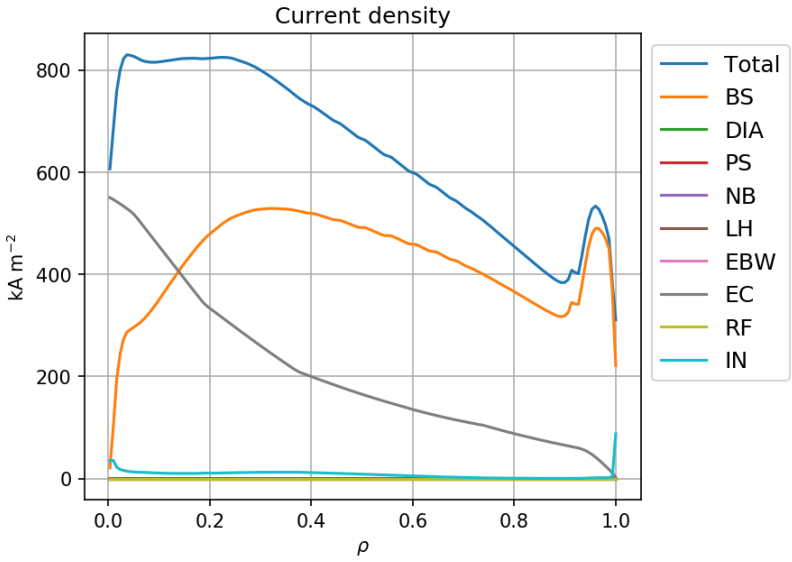

H&CD	EC
R_{geo} [m]	3.6
A	1.8
$B_{\mathrm{T}}(R_{\mathrm{geo}})$[T]	3.2
I_p [MA]	22.8
P_{fus} [GW]	1.62
P_{aux} [MW]	160
P_{rad} [MW]	280
Q	10.1
β_N	4.6
$f_{BS} = I_{BS}/I_p$	0.76
$f_{GW} = \bar{n}/n_{GW}$	0.60
l_i (3)	0.30
η_{CD}^{EC} [A/W]	0.033
P_{sep}/R_{geo} [MW/m]	41

Optimised using ITPA confinement scaling:

$$\left(H_{\mathrm{ITPA20-IL}} + H^{*}_{\mathrm{ITPA20-IL}}\right)/2 = 1.36$$

F. Casson, F. Koechl, S. Marsden, G. Szepesi, E. Tholerus, T. Wilson

"Predictive" uncertainty quantification shows margin in P_{aux} & P_{fus} needed to recover target Q

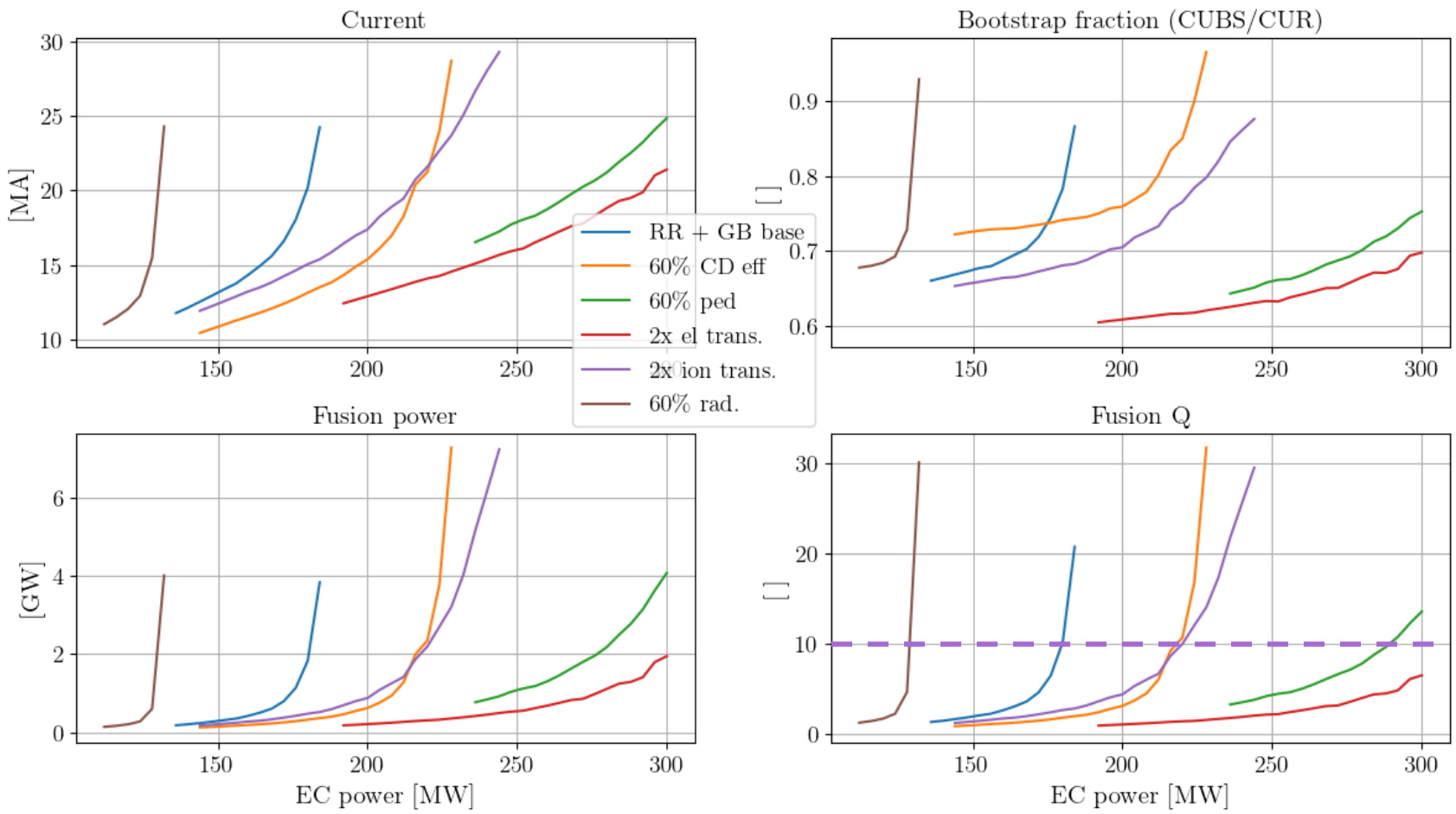

- Simple predictive setup:
  - Electrons: Rechester Rosenbluth (RR)
    - ➢ collisionless RR with $\delta B/B$ from [1] & connection length from [2]
  - Ions: gyro-Bohm
  - Predict T_i, T_e, n_e, I_p
  - Pedestal: $p_{ped} \propto I_p^{0.8} f_{GW}^{0.45}$ $\Rightarrow P_{fus}$ very sensitive to I_p
- In base case $Q \approx 10$ needs $P_{aux} \sim 180$ MW & $P_{fus} \sim 2$ GW
- Performance sensitive to core radiation fraction

[1] J.F. Drake et al. PRL **44** (1980) 994
[2] K. L. Wong et al. PRL **99** (2007) 135003

Integrated modelling: *F. Casson, F Palermo*
Pedestal scaling: *S. Saarelma*

Outline

- Role of STEP in path to power plant
- Advantages/challenges of spherical tokamak approach
- Plasma modelling workflow
- Flat-top operating points
- Divertor design
- Stability control
- EC & EBW current drive
- Core confinement
- α-particle confinement
- Plasma start-up

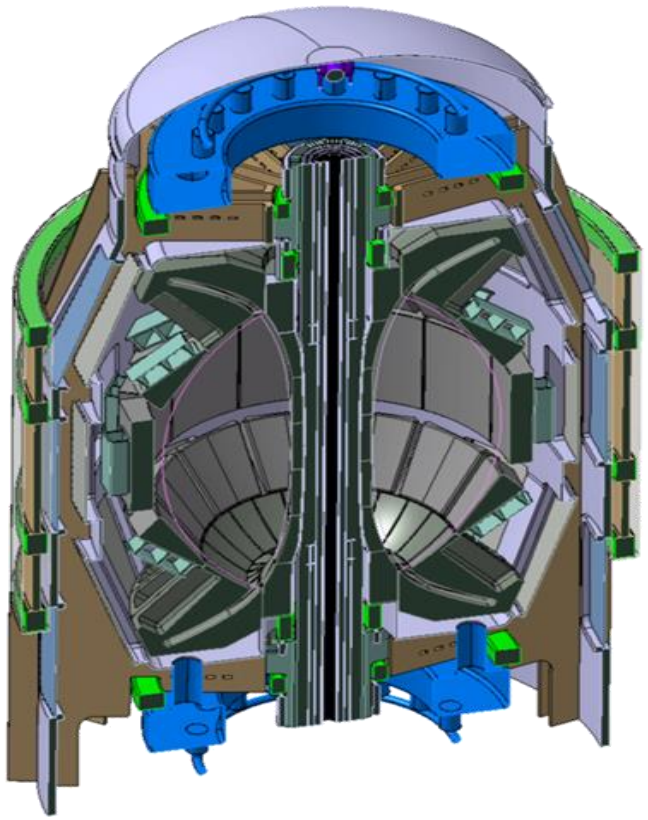

Non-inductive flat-top operating point with access to ECCD and EBW $\Rightarrow B_T = 3.2\ T$

ECCD: Electron cyclotron heating & current drive
EBW: Electron Bernstein wave heating & current drive

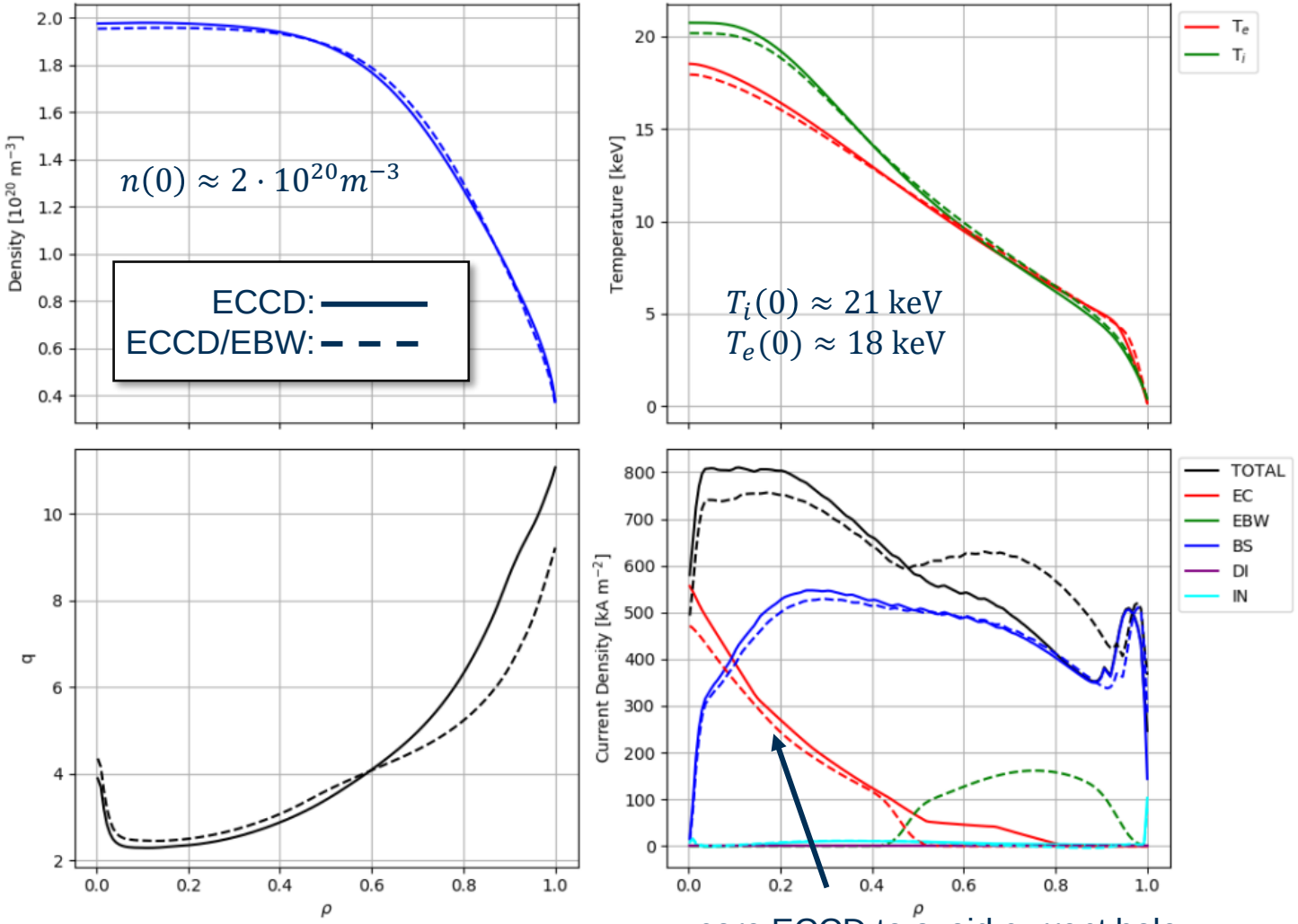

core ECCD to avoid current hole

Preliminary coil-set

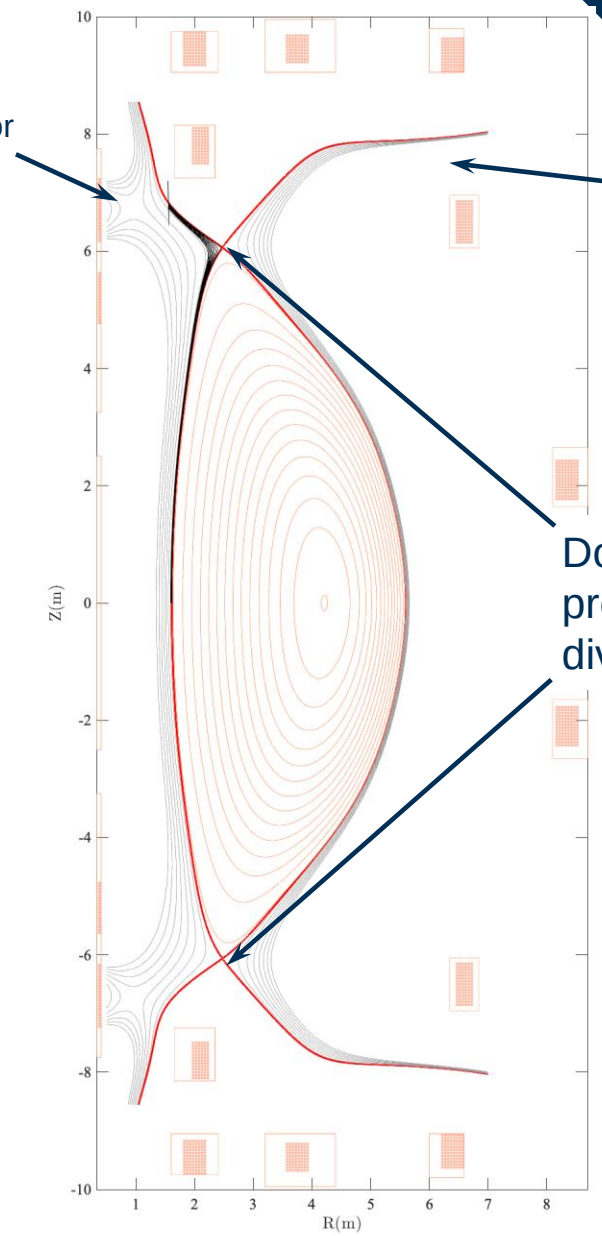

inner X-divertor

Outer divertor – extended leg

Double null to protect inner divertor

Further optimisation of inner & outer divertor legs in progress

A. Hudoba, S. Bakes

X-divertor may provide optimum exhaust solution on inboard side

- SOLPS-ITER code used to assess level of detachment & target heat loads in various divertor geometries

- Inboard X-divertor poses engineering challenge but has significant advantages:

  - when strike point radius ~1.7m, connection length $L_{||}$ is nearly doubled

  - offers best performance with fewest compromises in terms of neutral trapping & peak heat loading

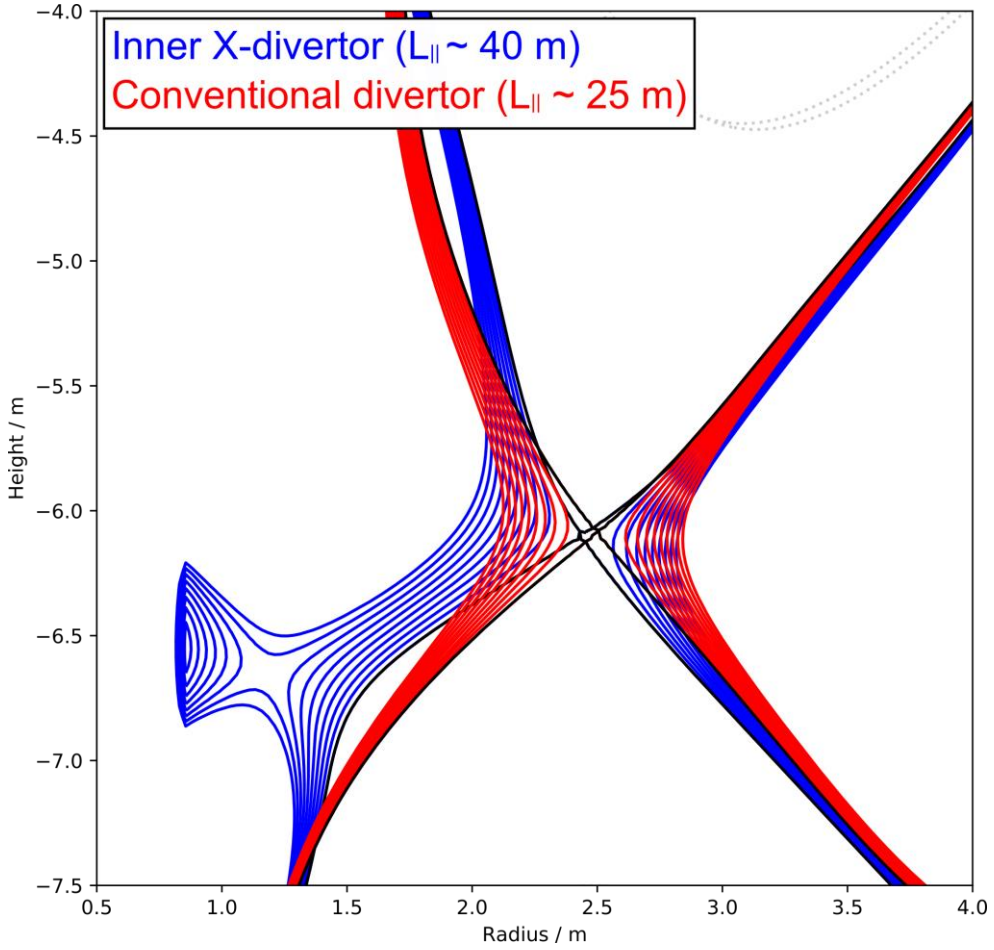

S. Henderson, A. Hudoba

Outline

- Role of STEP in path to power plant
- Advantages/challenges of spherical tokamak approach
- Plasma modelling workflow
- Flat-top operating points
- Divertor design
- Stability control
- EC & EBW current drive
- Core confinement
- α-particle confinement
- Plasma start-up

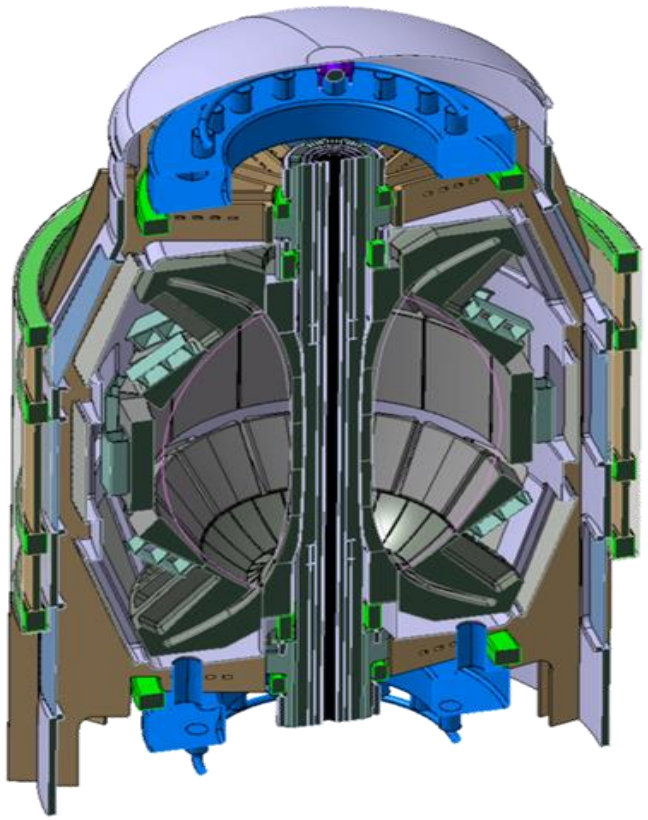

Active control of RWMs allows access to higher β_N

- STEP scenarios marginally above ideal stability limit without conducting wall:

$$\beta_N > \beta_N^{no-wall}$$

- Conducting wall reduces growth rate to resistive values ⇒ controllable:

$$\beta_N < \beta_N^{ideal-wall}$$

- Active in-vessel coils can keep amplitude of instability well below disruption limit
  - 6 mid-plane picture-frame coils
  - Control system modelled with system noise

EC operating point

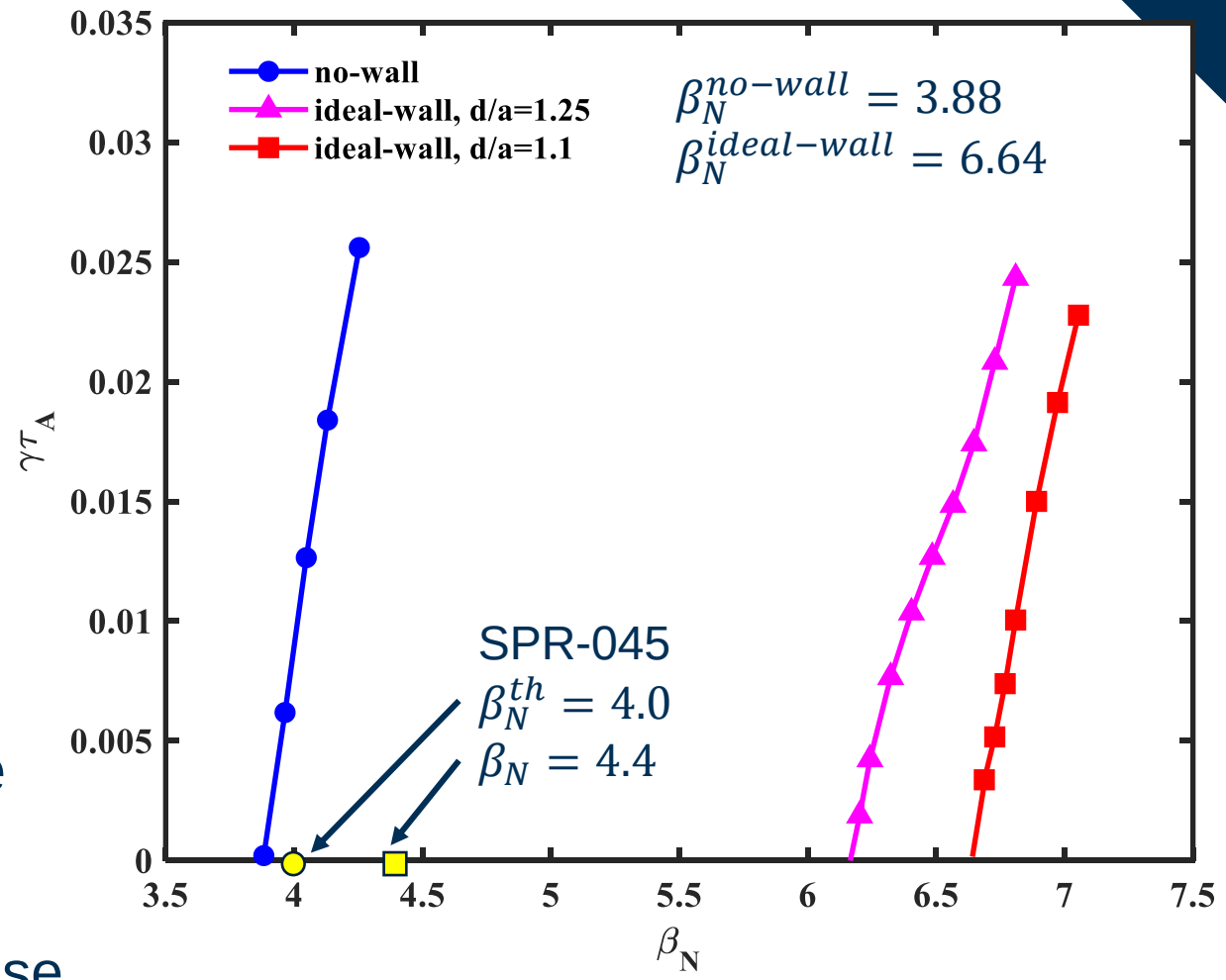

G. Xia, T. Hender, Y. Liu (GA)

Active control of RWMs allows access to higher β_N

- STEP scenarios marginally above ideal stability limit without conducting wall:

$$\beta_N > \beta_N^{no-wall}$$

- Conducting wall reduces growth rate to resistive values ⇒ controllable:

$$\beta_N < \beta_N^{ideal-wall}$$

- Active in-vessel coils can keep amplitude of instability well below disruption limit
  - 6 mid-plane picture-frame coils
  - Control system modelled with system noise

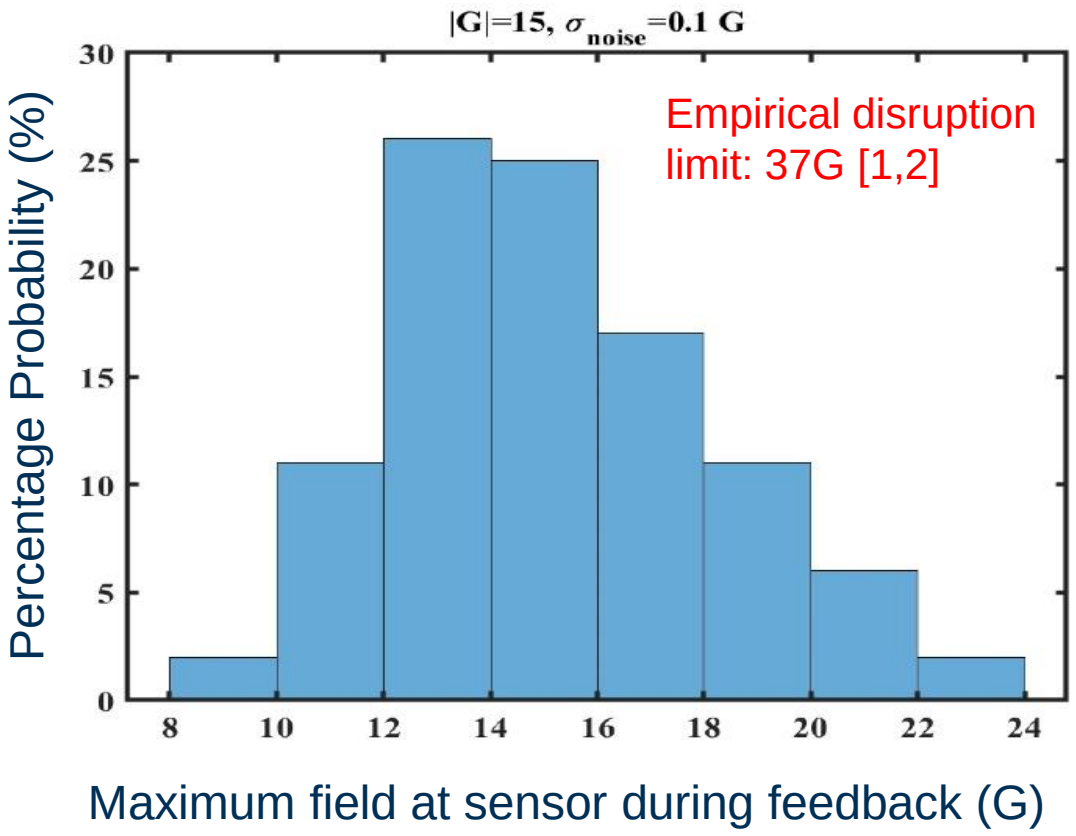

[1] P.C. de Vries et al. Nucl. Fusion **56** (2016) 026007
[2] G. Xia et al. Proc. 48th EPS Plasma Phys. Conf. (2022)

G. Xia, T. Hender, Y. Liu (GA)

Outline

- Role of STEP in path to power plant
- Advantages/challenges of spherical tokamak approach
- Plasma modelling workflow
- Flat-top operating points
- Divertor design
- Stability control
- EC & EBW current drive
- Core confinement
- α-particle confinement
- Plasma start-up

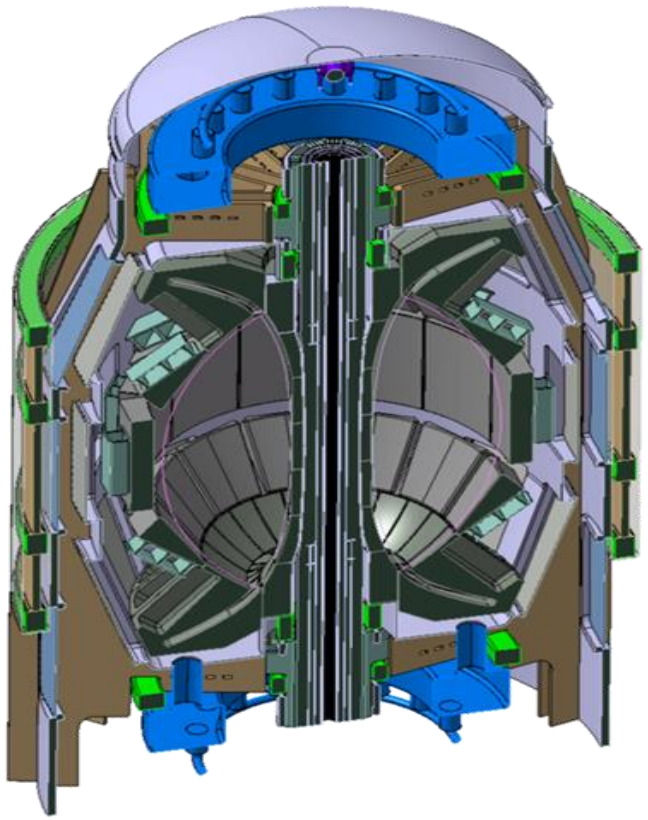

ECCD O-mode covers full radius; EBW only covers $\rho > 0.4$ but at 3 - 4 × higher normalised efficiency

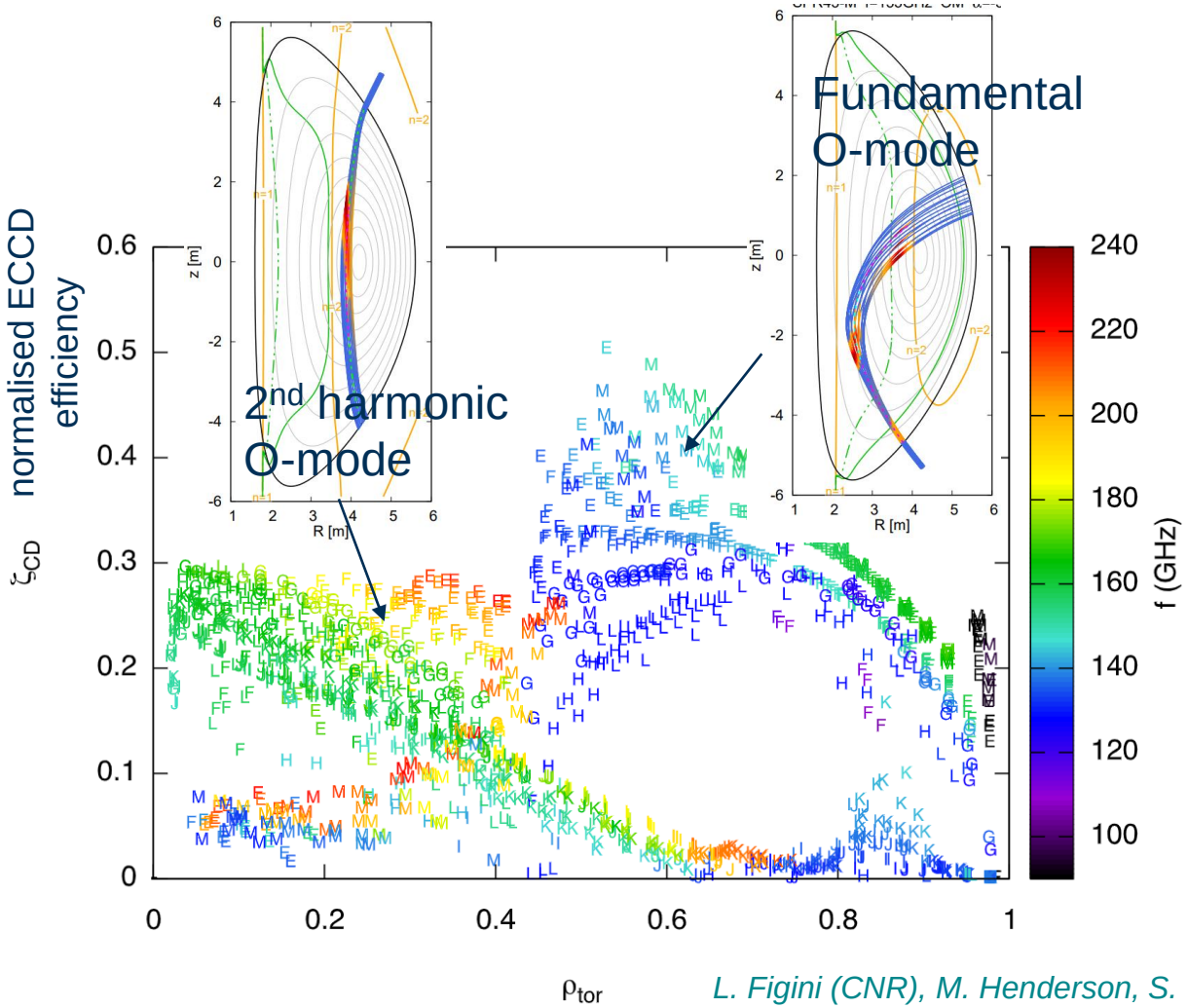

$$\zeta_{CD} = 32.7 \frac{\eta[A/W] n_e [10^{20} m^{-3}] R[m]}{T_e[keV]}$$

- ECCD: scan with GRAY code for multiple launch positions & frequencies
  - Low-field side O-mode launch from above/below midplane allows access through magnetic field well
  - High-field side absorption negates particle trapping degradation for off-axis current drive
- EBW: full wave calculation using GENRAY + CQL3D
  - High central T_e makes $\rho < 0.4$ inaccessible
  - 2nd harmonic with dominant Ohkawa current drive [1]

L. Figini (CNR), M. Henderson, S. Freethy

[1] G. Taylor et al. Phys. Plasmas **11** (2004) 4733

ECCD O-mode covers full radius; EBW only covers $\rho > 0.4$ but at 3 - 4 × higher normalised efficiency

Normalised EBW CD efficiency

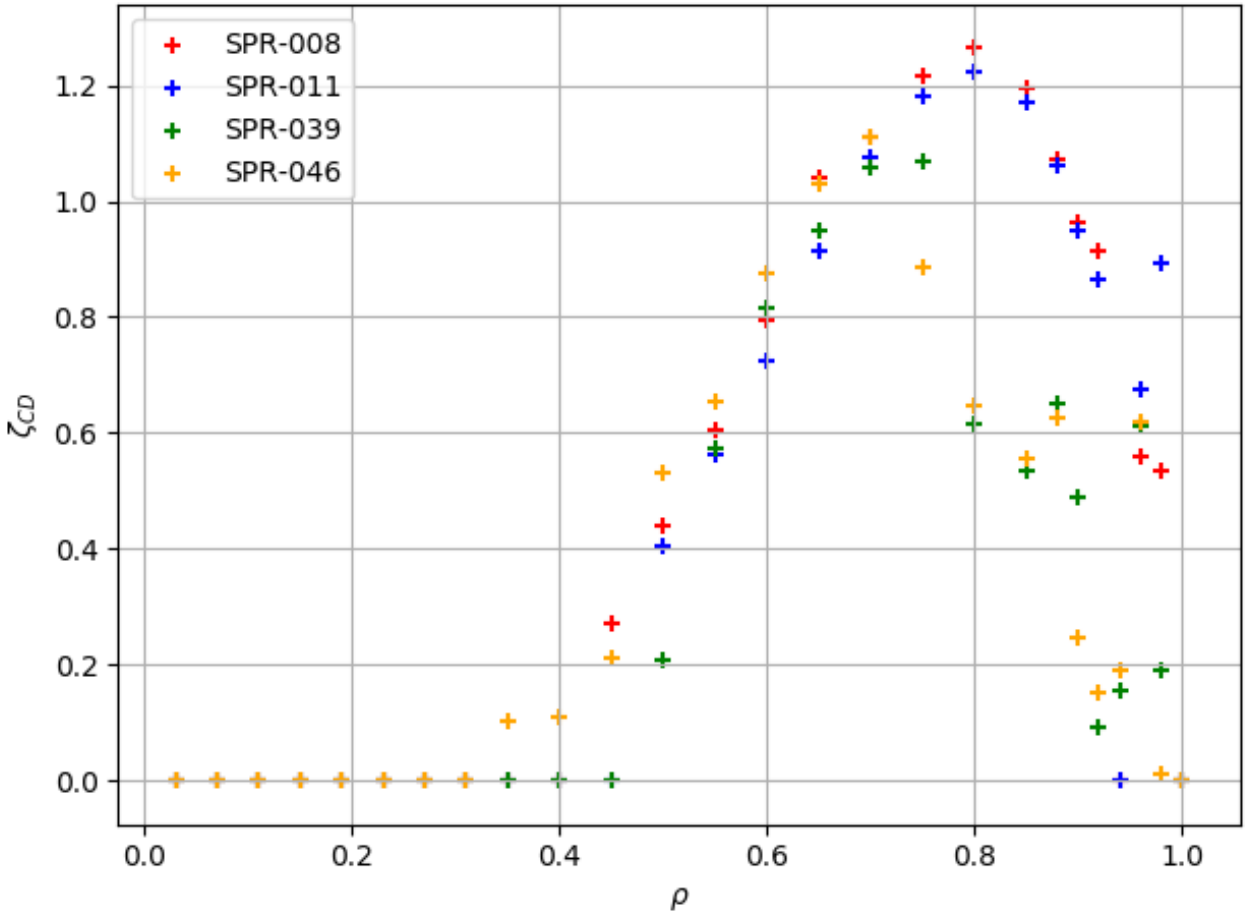

$$\zeta_{CD} = 32.7 \frac{\eta[A/W] n_e [10^{20} m^{-3}] R[m]}{T_e[keV]}$$

- ECCD: scan with GRAY code for multiple launch positions & frequencies
  - Low-field side O-mode launch from above/below midplane allows access through magnetic field well
  - High-field side absorption negates particle trapping degradation for off-axis current drive
- EBW: full wave calculation using GENRAY + CQL3D
  - High central T_e makes $\rho < 0.4$ inaccessible
  - 2nd harmonic with dominant Ohkawa current drive [1]

D. Speirs (U. Strathclyde) , T. Wilson, M. Henderson, S. Freethy

[1] G. Taylor et al. Phys. Plasmas **11** (2004) 4733

Outline

- Role of STEP in path to power plant
- Advantages/challenges of spherical tokamak approach
- Plasma modelling workflow
- Flat-top operating points
- Divertor design
- Stability control
- EC & EBW current drive
- Core confinement
- α-particle confinement
- Plasma start-up

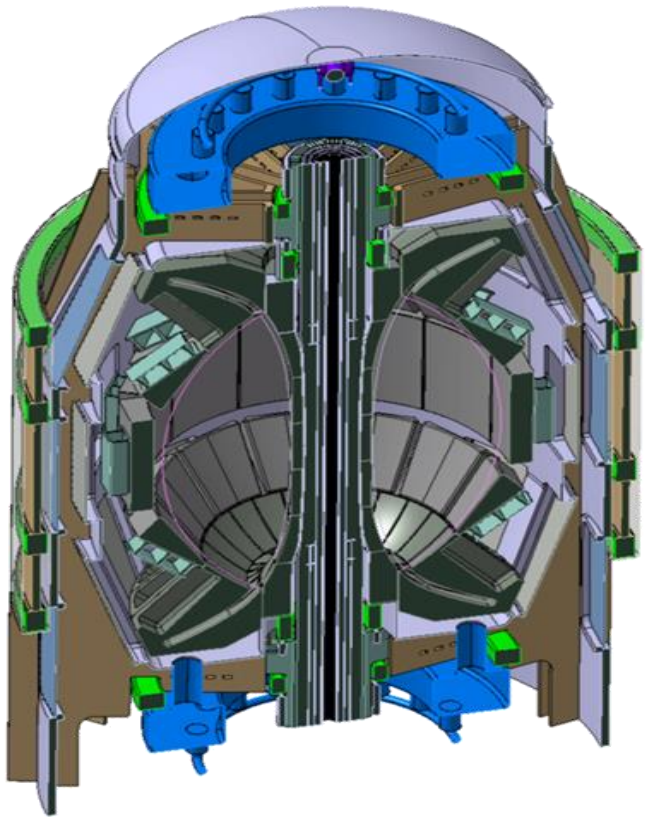

Microstability in STEP differs significantly from JET, DEMO & ITER

B.S. Patel et al. Nucl. Fusion **62** (2022) 016009

- Electromagnetic turbulence dominates
  - 2 types of micro tearing mode (MTM) at low $k_\perp \rho_s$ (i-MTM) & high $k_\perp \rho_s$ (e-MTM)
  - kinetic ballooning modes (KBMs)
- KBMs have highest growth rates at low $k_\perp \rho_s$ but may be stabilised by flow & β'
- MTMs mainly drive conductive electron heat transport via turbulent radial reconnection of field lines (magnetic flutter [1])

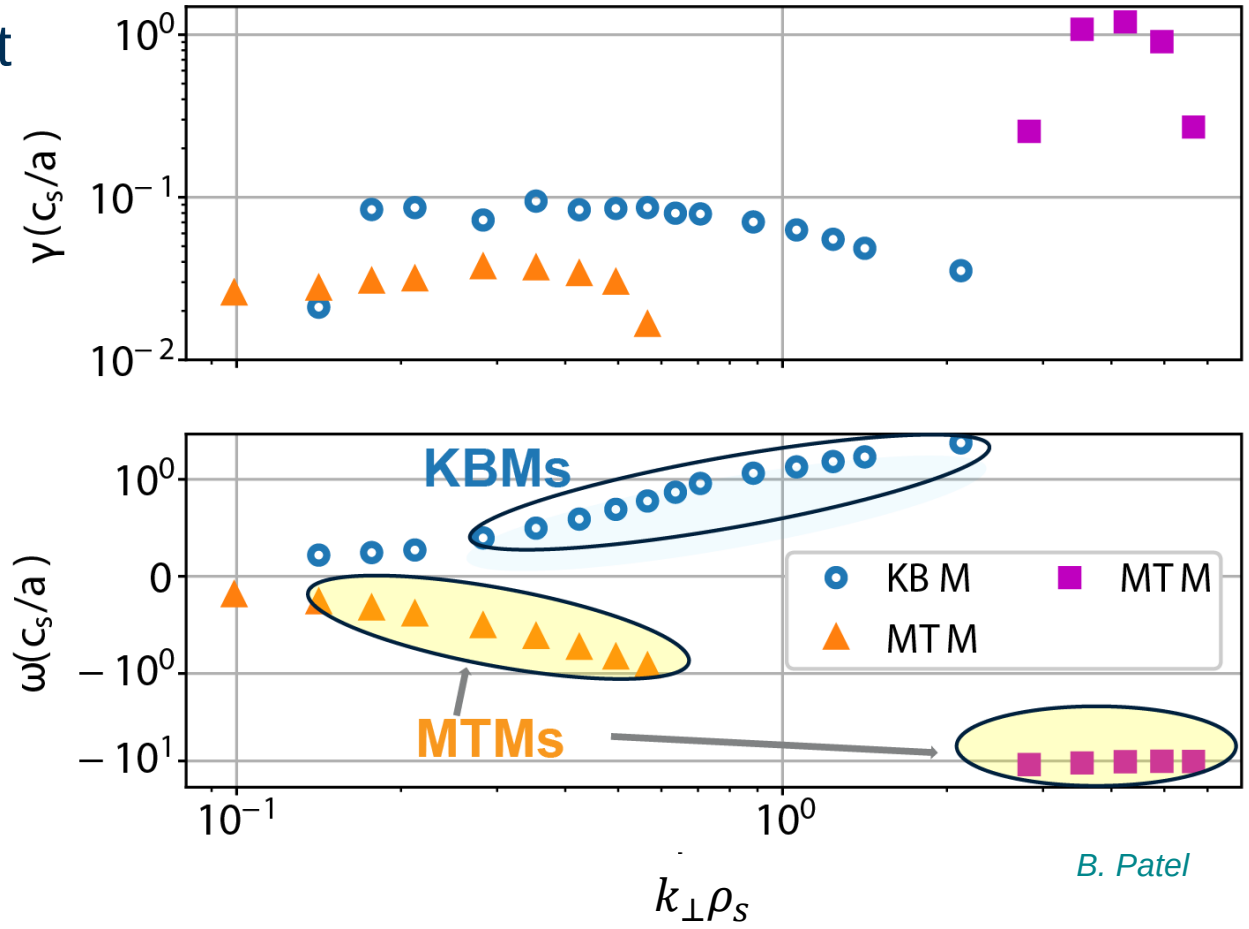

B. Patel

[1] J.D. Callen PRL **39** (1977) 1540

Outline

- Role of STEP in path to power plant
- Advantages/challenges of spherical tokamak approach
- Plasma modelling workflow
- Flat-top operating points
- Divertor design
- Stability control
- EC & EBW current drive
- Core confinement
- α-particle confinement
- Plasma start-up

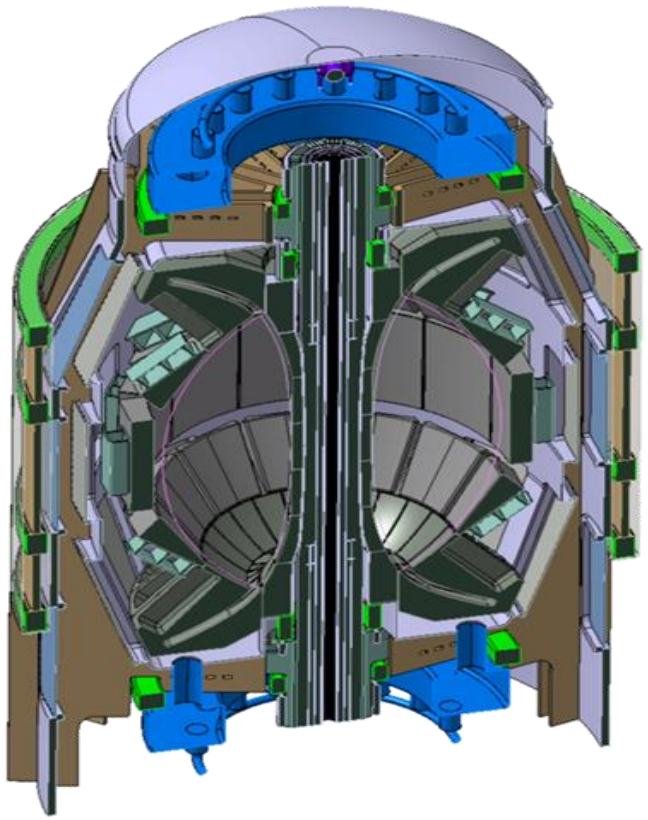

Power loads due to α-particle losses used to constrain parameters of TF & ELM control coils

- Full α-particle orbits in 3D fields tracked using LOCUST code
- TF ripple-induced α-particle losses & distribution of associated power loads on 1st wall calculated for N = 16 picture-frame coils with range of outer limb radii R_{coil}
- Maximum loads occur on low field side main chamber wall which can tolerate up to ~1MWm^{-2} in total (including EM radiation)
- Power loads acceptably low for $R_{coil} \geq 8.0$m
- Coils designed for RWM control & error field correction may also be used for ELM control
- α-particle loss & power load calculations for 3D fields needed for ELM control coils underway – significant uncertainty in coil configurations required for suppression of Type I ELMs

A.P. Prokopyszyn, H.J.C. Oliver

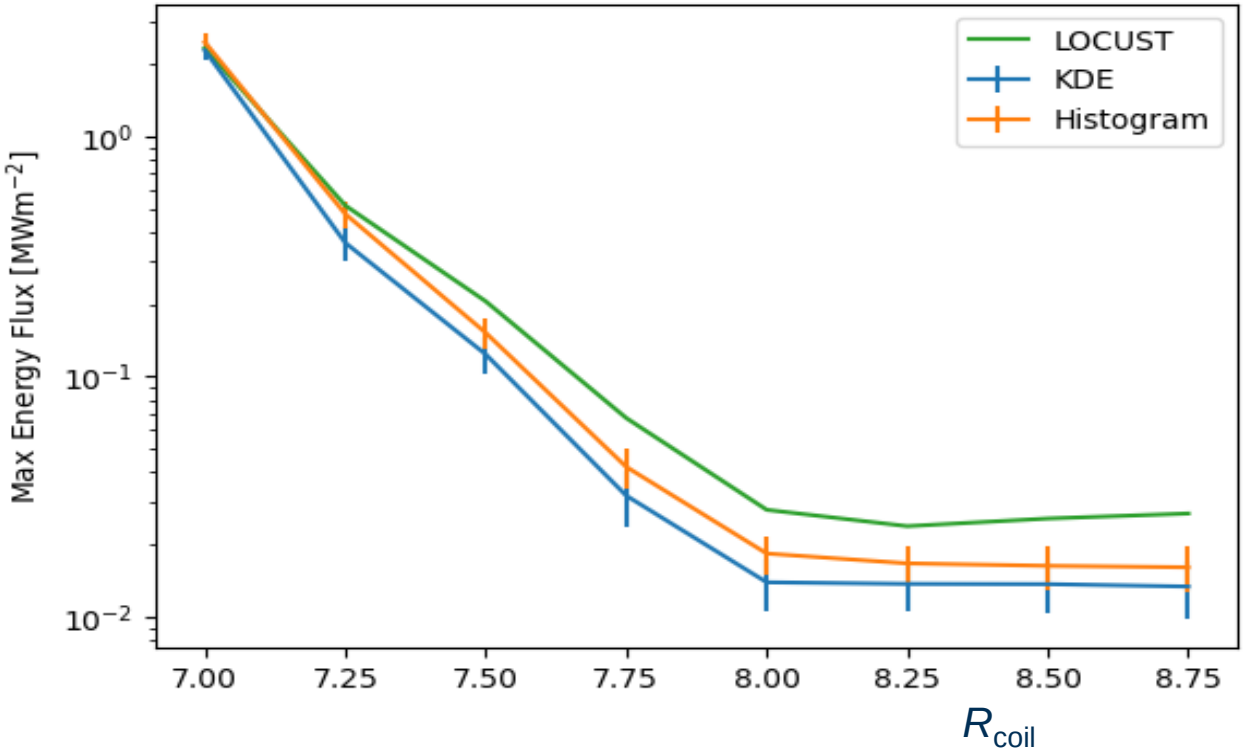

K.G. McClements et al. Proc. 48th EPS Plasma Phys. Conf. (2022)

Outline

- Role of STEP in path to power plant
- Advantages/challenges of spherical tokamak approach
- Plasma modelling workflow
- Flat-top operating points
- Divertor design
- Stability control
- EC & EBW current drive
- Core confinement
- α-particle confinement
- Plasma start-up

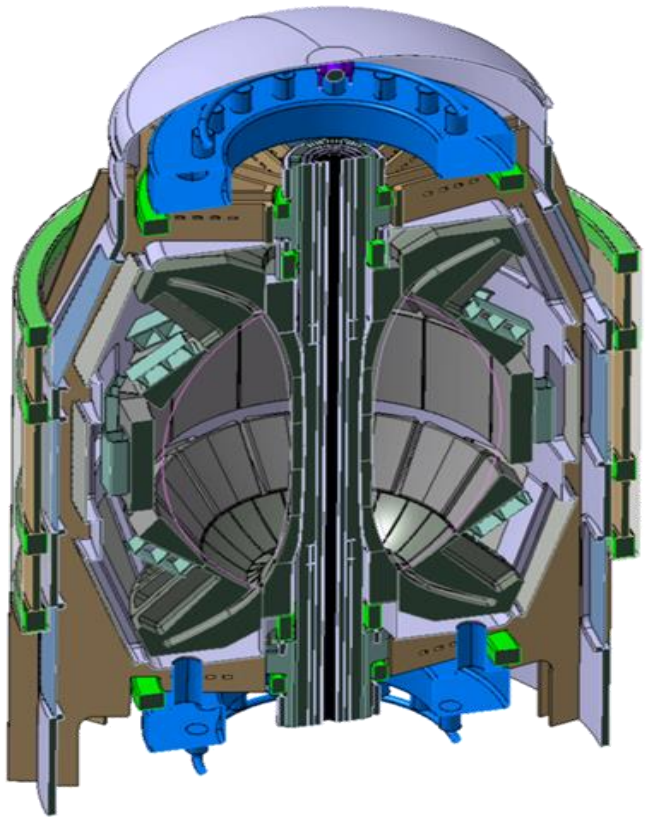

Burn-through achieved after 350 ms with $V_{\mathrm{loop}} < 10\ V$ using hexapole null at $R = 3\ \mathrm{m}$

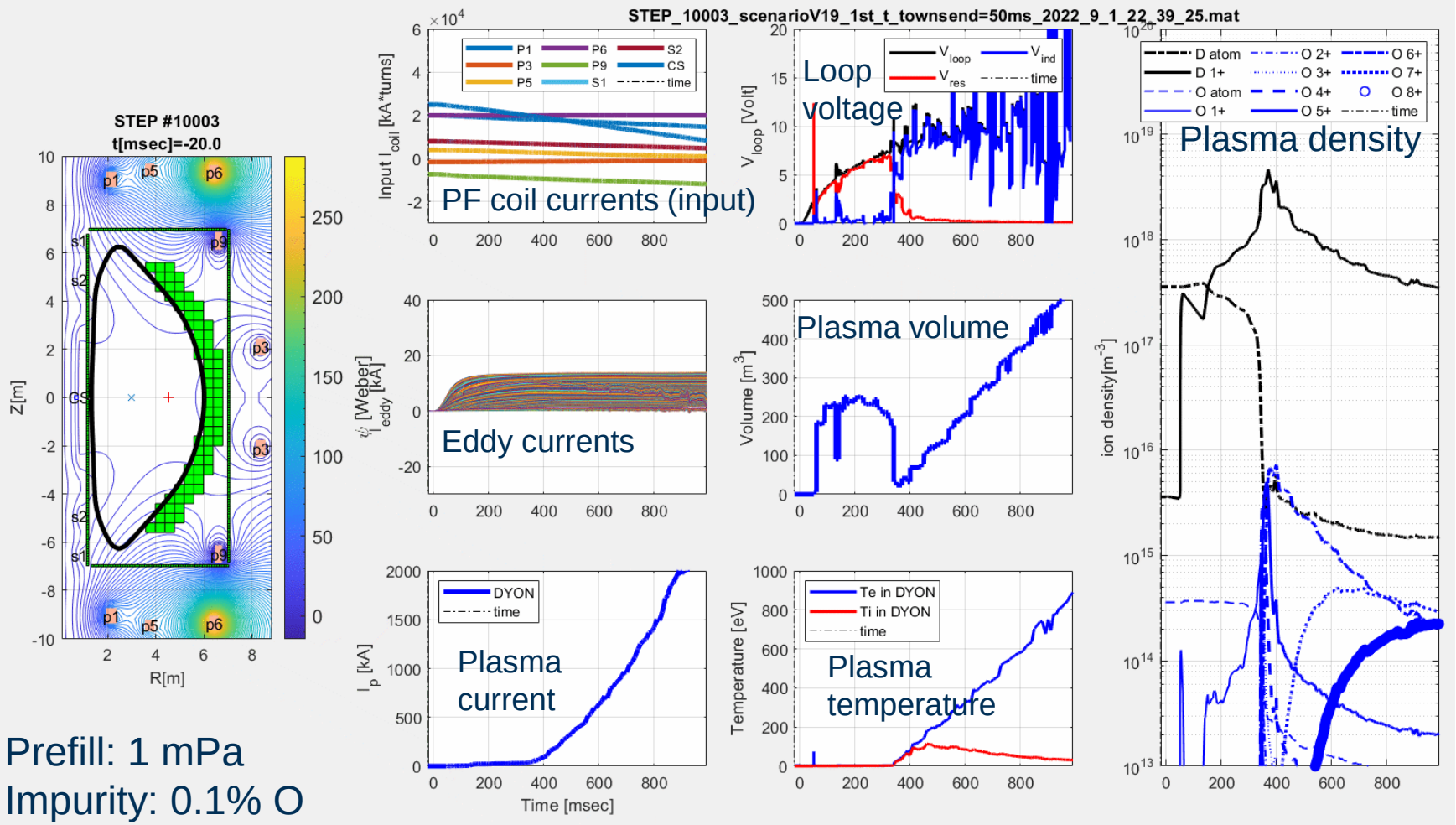

Prefill: 1 mPa
Impurity: 0.1% O

- Small ~9 Vs solenoid used for initiation & target plasma production
- DYON code used to simulate burn-through
  - ➢ supported by free boundary equilibrium solver (FIESTA)
  - ➢ self-consistent calculation of eddy currents & Townsend break down
- ECRH pre-ionisation & heating expected to lower V_{loop} requirement

H.T. Kim

H.T. Kim et al. Nucl. Fusion **62** (2022) 126012

STEP plasma work improving confidence in feasibility of ST-based fusion power plant capable of long pulse operation

UK Atomic Energy Authority

Limited space for central solenoid & long ramp-up time in compact device ⇒ challenges of long pulse operation in power plant need to be addressed

Fast concept turn-around has made it possible to explore variety of whole plant concepts using 1D transport code & integrated modelling tools

Three fully non-inductive flat-top operating points have been defined, trading confinement risk against heating & current drive maturity

Tool set for scenario modelling is reducing uncertainties/risks in exhaust, stability, current drive, core plasma/α-particle confinement, start-up & ramp-up